# Managed Ethernet Switches and Routers

## Lynx 3000 Series Gen2

- **High performance and flexibility**
  - Layer 2 switching and Layer 3 routing models
  - Ethernet speeds up to 2.5 Gbit/s
  - Powered by WeOS for resilient networking, routing and segmentation
- **Built for demanding environments**
  - Fanless operation from -40 to +70 °C[a]
  - Rugged IP40 full-metal housing
  - Industrial, marine and trackside type tested
- **Compact and installation-friendly**
  - Flexible copper, SFP and PoE configurations
  - Up to 240 W total PoE power budget on selected models
  - Multiple integrated mounting options
- **Strong built-in cybersecurity**
  - Secure Boot and TPM-based hardware root of trust
  - VPN, stateful firewall and IEEE 802.1X
  - IEC 62443-4-2 Security Level 2 certified[b]

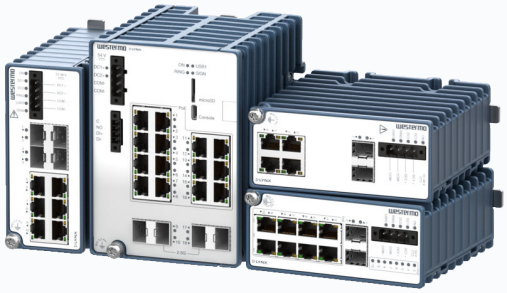

CE
AREMA Am. Railway Engineering
c UL us LISTED
DNV
EN 50121-4 Railway Trackside
EN 61000-6-2 Industrial Immunity
EN 61000-6-4 Industrial Emission
IEC 62443-4-2 Security Level 2
NEMA TS 2 Traffic Controller Assemblies

## Product Description

The Lynx 3000 series Gen2 comprises compact, high-performance managed Ethernet switches and routers for mission-critical OT networks. From standard models to multi-gigabit variants for bandwidth-intensive applications, the range provides layer 2 switching and layer 3 routing with Ethernet speeds up to 2.5 Gbit/s and a choice of copper, SFP and PoE configurations. One common product family simplifies network design, configuration and lifecycle management.

Rugged, fanless IP40 full-metal housings operate from -40 to +70 °C[c]. Industrial-grade components and testing for vibration, shock, humidity, corrosive gases and electrical disturbances ensure high availability and a long service life in industrial, marine and trackside environments.

Selected PoE models provide a total power budget of up to 240 W, delivering power and data over a single cable to HD cameras, wireless access points and other powered industrial devices.

Powered by WeOS, Lynx 3000 series Gen2 provides comprehensive functionality for network redundancy, routing, segmentation, management and security. Secure boot verifies software integrity during startup, while the Trusted Platform Module (TPM) provides a hardware root of trust for protecting cryptographic keys and sensitive data. VPN, stateful firewall and IEEE 802.1X capabilities help protect network access and communications. Lynx 3306, Lynx 3310 and Lynx 3510 Gen2 variants are certified to IEC 62443-4-2 Security Level 2.

With two mechanical designs and flexible mounting options, Lynx 3000 series Gen2 is suited to transportation, manufacturing, energy, smart cities and other critical infrastructure requiring secure connectivity, high availability and long-term reliability.

[a]Operating-temperature limitations depend on model and installation conditions. See the user guide.
[b]Applies to Lynx 3306, 3310 and 3510 models
[c]Operating-temperature limitations depend on model and installation conditions. See the user guide.

# Specifications - Lynx 3000 Series Gen2

## Dimensional drawing - Form factor A

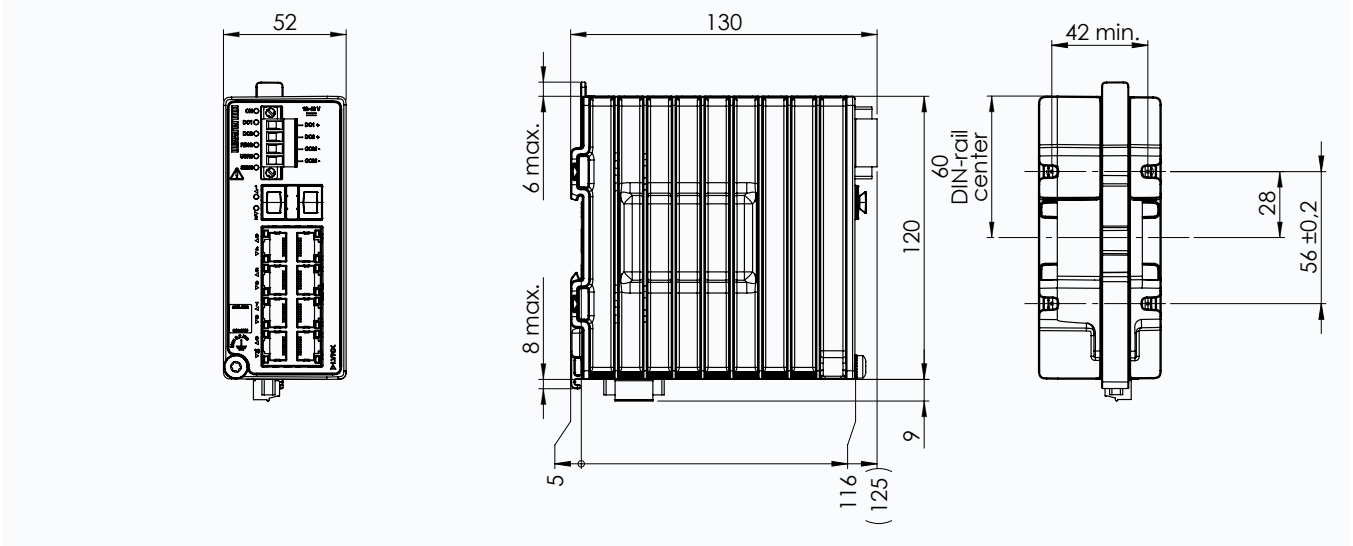


## Dimensional drawing - Form factor B

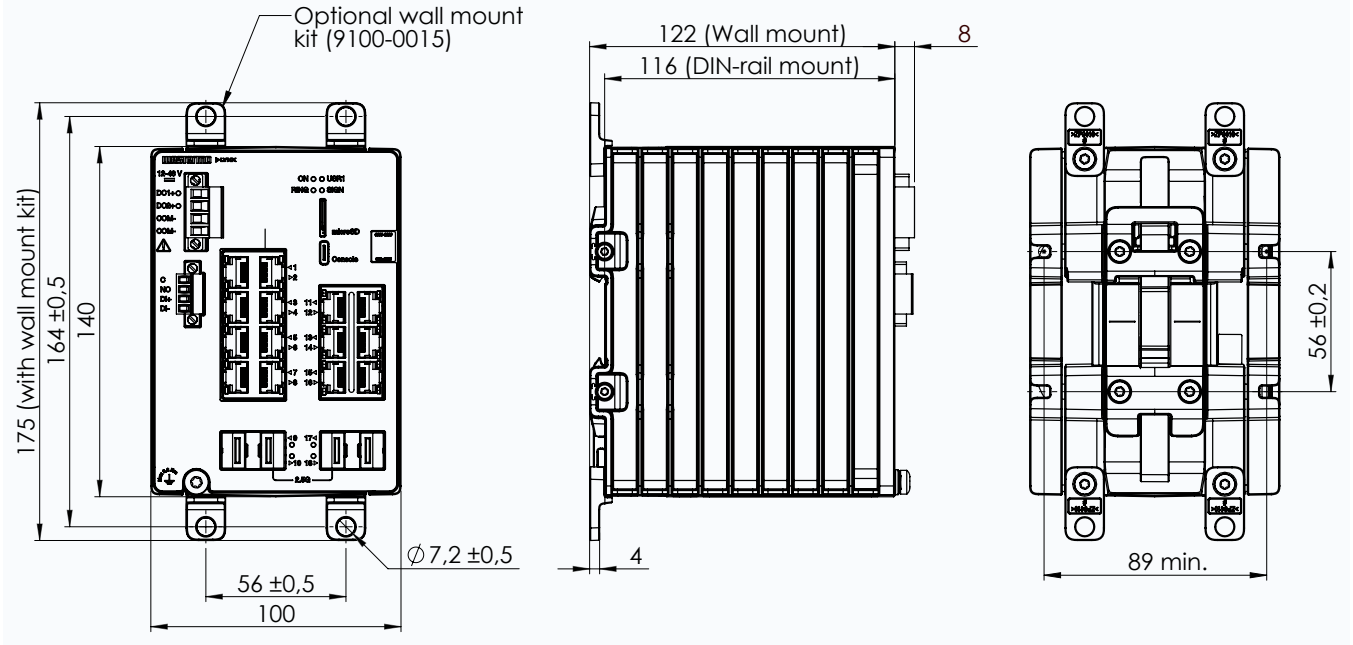


| Housing | Form factor A | Form factor B |
|---|---|---|
| **Dimensions (W x H x D)** | 52 x 135 x 130 mm (2.05 x 5.31 x 5.12 inches) DIN-rail mounted, with contacts<br>Wall mount brackets not available | 100 x 140 x 116 mm (3.94 x 5.51 x 4.57 inches) DIN-rail mounted, with contact<br>100 x 175 x 122 mm (3.94 x 6.89 x 4.80 inches) wall mounted with brackets, with contact |
| **Housing** | Full metal | |
| **Weight** | 1100 gr | 1930 gr |

| Power parameters | |
|---|---|
| **Rated voltage** | 12 to 48 VDC (non PoE models)<br>54 VDC (PoE models) |
| **Operating voltage** | Non-PoE models: 9.6 to 60 VDC<br>PoE models:<br>802.3at (PoE+): 53 to 57 VDC<br>802.3af: 48 to 57 VDC<br>No PoE usage: 9.6 to 60 VDC |
| **Rated current** | *Form factor A:*<br>Lynx-3510(-E)-F4G-T6G-LV(-CC), Lynx-3510(-E)-F2G2.5-F2G-T6G-LV(-CC),<br>Max 1.1 A at 12 VDC, max 0.27 A at 48 VDC<br>PoE models, max 4.8 A<br>All others, max 0.6 A at 12 VDC, max 0.16 A at 48 VDC<br>*Form factor B:*<br>Max 1.2 A at 12 VDC, max 0.29 A at 48 VDC |
| **Power budget (PoE models)**[a.] | *Form factor A:*<br>Max. 240 W total PD consumption<br>Max. 30 W per PoE port |

[a.] See User guide for limitations

| Environmental | |
|---|---|
| **Operating temperature** | -40 to +70°C (-40 to +158°F) |
| **Storage and transport temperatures** | -40 to +85°C (-40 to +185°F)[a.] |
| **Ingress protection** | IP40 |
| **Humidity (operating)** | 5-95% relative humidity |
| **Corrosive gases** | IEC 60068-2-60 |
| **Altitude** | 2000 m/80 kPa |
| **MTBF Telcordia** | Lynx-3306(-E)-F2G-T4-LV, Lynx-3510(-E)-F2G-T8G-LV(-CC): 1,035,000 h<br>Lynx-3310(-E)-F2G-T8-LV(-CC): 1,138,000 h<br>Lynx-3510(-E)-F2G2.5-F2G-T6G-LV(-CC), Lynx-3510(-E)-F4G-T6G-LV(-CC): 1,022,000 h<br>Lynx-3510-F2G-P8G-LV(-CC), Lynx-3510(-E)-F2G2.5-P8G-LV: 638,000 h<br>Lynx-3518(-E)-F4G-T14G-LV, Lynx-3518(-E)-F2G2.5-F2G-T14G-LV: 1,071,000 h |
| **MTBF MIL-HBDK-217F** | Lynx-3306(-E)-F2G-T4-LV, 3510(-E)-F2G-T8G-LV(-CC) and<br>Lynx-3510(-E)-F2G2.5-T8G-LV(-CC): 879,000 h<br>Lynx-3310(-E)-F2G-T8-LV(-CC): 974,000 h<br>Lynx-3510(-E)-F4G-T6G-LV(-CC), Lynx-3510(-E)-F2G2.5-F2G-T6G-LV(-CC): 662,000 h<br>Lynx-3510-F2G-P8G-LV(-CC), Lynx-3510(-E)-F2G2.5-P8G-LV: 583,000 h<br>Lynx-3518(-E)-F4G-T14G-LV, Lynx-3518(-E)-F2G2.5-F2G-T14G-LV: 460,000 h |

[a.] -55 to +85°C (-48,3 to +185°F) for Lynx-3510(-E)-F4G-T6G-LV(-CC) and Lynx-3510(-E)-F2G2.5-F2G-T6G-LV(-CC)

| Interface | |
|---|---|
| **Console** | USB-C |
| **Micro SD** | Secure Digital 2.0 |
| **Digital input** | 1 pcs, screw terminal |
| **Digital output** | 1 pcs, screw terminal |

| Art. no. | Model[a.] | SFP ports | RJ45 ports (PoE) | Other ports & interfaces |
|---|---|---|---|---|
| **Form factor A - 6 ports** | | | | |
| 3627-1600 | Lynx-3306-F2G-T4-LV | 2 x 1 Gbit/s | 4 x 100 Mbit/s | - |
| 3627-1610 | Lynx-3306-E-F2G-T4-LV | | | |
| **Form factor A - 10 ports** | | | | |
| 3627-1560 | Lynx-3310-F2G-T8-LV | 2 x 1 Gbit/s | 8 x 100 Mbit/s | - |
| 3627-1561 | Lynx-3310-F2G-T8-LV-CC | | | |
| 3627-1570 | Lynx-3310-E-F2G-T8-LV | | | |
| 3627-1571 | Lynx-3310-E-F2G-T8-LV-CC | | | |
| 3627-1520 | Lynx-3510-F2G-T8G-LV | | 8 x 1 Gbit/s | I/O, micro SD |
| 3627-1521 | Lynx-3510-F2G-T8G-LV-CC | | | |
| 3627-1530 | Lynx-3510-E-F2G-T8G-LV | | | |
| 3627-1531 | Lynx-3510-E-F2G-T8G-LV-CC | | | |
| 3627-1540 | Lynx-3510-F2G2.5-T8G-LV | 2 x 2.5 Gbit/s | | |
| 3627-1541 | Lynx-3510-F2G2.5-T8G-LV-CC | | | |
| 3627-1550 | Lynx-3510-E-F2G2.5-T8G-LV | | | |
| 3627-1551 | Lynx-3510-E-F2G2.5-T8G-LV-CC | | | |
| 3627-1500 | Lynx-3510-F2G-P8G-LV | 2 x 1 Gbit/s | 8 x 1 Gbit/s (8 x PoE+, 802.3at) | |
| 3627-1501 | Lynx-3510-F2G-P8G-LV-CC | | | |
| 3627-1510 | Lynx-3510-E-F2G-P8G-LV | | | |
| 3627-1511 | Lynx-3510-E-F2G-P8G-LV-CC | | | |
| 3627-1580 | Lynx-3510-F2G2.5-P8G-LV | 2 x 2.5 Gbit/s | | |
| 3627-1590 | Lynx-3510-E-F2G2.5-P8G-LV | | | |
| 3627-0620 | Lynx-3510-F4G-T6G-LV | 4 x 1 Gbit/s | 6 x 1 Gbit/s | |
| 3627-0630 | Lynx-3510-E-F4G-T6G-LV | | | |
| 3627-0640 | Lynx-3510-F2G2.5-F2G-T6G-LV | 2 x 1 Gbit/s 2 x 2.5 Gbit/s | | |
| 3627-0650 | Lynx-3510-E-F2G2.5-F2G-T6G-LV | | | |
| **Form factor B - 18 ports** | | | | |
| 3627-4020 | Lynx-3518-F4G-T14G-LV | 4 x 1 Gbit/s | 14 X 1 Gbit/s | I/O, micro SD |
| 3627-4030 | Lynx-3518-E-F4G-T14G-LV | | | |
| 3627-4060 | Lynx-3518-F2G2.5-F2G-T14G-LV | 2 x 1 Gbit/s 2 x 2.5 Gbit/s | | |
| 3627-4070 | Lynx-3518-E-F2G2.5-F2G-T14G-LV | | | |

[a.] E = extended level (layer 3), non-E = standard level (layer 2), CC = conformal coating

| Approvals | |
|---|---|
| **EMC** | EN/IEC 61000-6-2, Immunity industrial environments<br>EN/IEC 61000-6-4, Emission industrial environments |
| **Trackside** | EN 50121-4/IEC 62236-4, Railway signalling and telecommunications apparatus |
| **Environmental**[a.] | NEMA TS2, Traffic Controller Assemblies with NTCIP Requirements<br>AREMA; Communications and Signals manual[b.] |
| **Marine** | DNV rules for classification - Ships and offshore units |
| **Security**[c.] | IEC 62443-4-2, Security Level 2 |
| **Safety** | EN/IEC/UL 61010-1, Safety requirements for electrical equipment for measurement, control, and laboratory use - Part 1: General requirements<br>EN/IEC/UL 61010-2-201, Safety requirements for electrical equipment for measurement, control, and laboratory use - Part 2-201: Particular requirements |

[a.] Applicable for non-PoE models only

[b.] Applicable for Lynx(-E)-3510-F4G-T6G-LV(-CC), Lynx-3510(-E)-F2G2.5-F2G-T6G-LV(-CC) and form factor B (Lynx-3518)

[c.] Applies to Lynx 3306, 3310 and 3510 models

| Switch properties | |
|---|---|
| **Number of VLAN** | 64 |
| **Priority queues** | 8 |

| Software | |
|---|---|
| **WeOS** | WeOS 5; westermo.com/solutions/weos |
| **WeConfig** | westermo.com/solutions/weconfig |

| Warranty | |
|---|---|
| **Validity** | 5 years |

| Ordering information | |
|---|---|
| **Art. no.** | **Description** |
| **3627-0620** | Lynx-3510-F4G-T6G-LV |
| **3627-0630** | Lynx-3510-E-F4G-T6G-LV |
| **3627-0640** | Lynx-3510-F2G2.5-F2G-T6G-LV |
| **3627-0650** | Lynx-3510-E-F2G2.5-F2G-T6G-LV |
| **3627-1500** | Lynx-3510-F2G-P8G-LV |
| **3627-1501** | Lynx-3510-F2G-P8G-LV-CC |
| **3627-1510** | Lynx-3510-E-F2G-P8G-LV |
| **3627-1511** | Lynx-3510-E-F2G-P8G-LV-CC |
| **3627-1520** | Lynx-3510-F2G-T8G-LV |
| **3627-1521** | Lynx-3510-F2G-T8G-LV-CC |
| **3627-1530** | Lynx-3510-E-F2G-T8G-LV |
| **3627-1531** | Lynx-3510-E-F2G-T8G-LV-CC |
| **3627-1540** | Lynx-3510-F2G2.5-T8G-LV |
| **3627-1541** | Lynx-3510-F2G2.5-T8G-LV-CC |
| **3627-1550** | Lynx-3510-E-F2G2.5-T8G-LV |
| **3627-1551** | Lynx-3510-E-F2G2.5-T8G-LV-CC |
| **3627-1560** | Lynx-3310-F2G-T8-LV |
| **3627-1561** | Lynx-3310-F2G-T8-LV-CC |
| **3627-1570** | Lynx-3310-E-F2G-T8-LV |
| **3627-1571** | Lynx-3310-E-F2G-T8-LV-CC |
| **3627-1580** | Lynx-3510-F2G2.5-P8G-LV |
| **3627-1590** | Lynx-3510-E-F2G2.5-P8G-LV |
| **3627-1600** | Lynx-3306-F2G-T4-LV |
| **3627-1610** | Lynx-3306-E-F2G-T4-LV |
| **3627-4020** | Lynx-3518-F4G-T14G-LV |
| **3627-4030** | Lynx-3518-E-F4G-T14G-LV |
| **3627-4060** | Lynx-3518-F2G2.5-F2G-T14G-LV |
| **3627-4070** | Lynx-3518-E-F2G2.5-F2G-T14G-LV |

| Accessories | |
|---|---|
| **1 Gbit transceivers**<br>**2.5 Gbit transceivers** | https://www.westermo.com/products/accessories/sfp-transceivers |
| **3125-0150** | PS-60, power supply |
| **3125-0160** | PS-260, DIN-rail power supply unit |

# Specification WeOS 5

The WeOS operating system has been developed by Westermo for its current as well as future range of Ethernet hardware products. This layer 2 and layer 3 switching solution enables Westermo to create complex multimedia ring networks and routing solutions. WeOS not only provides solutions to many challenging industrial networking issues, but also helps to protect investments by ensuring the future availability of fully compatible solutions. WeOS is the core of our latest ranges of Ethernet hardware allowing complex multimedia ring networks and routing solutions to be created.

Westermo has many years of experience developing products for industrial applications. At the heart of all Westermo networking solutions is the need for ease of use. By standardising on a single operating system for all Westermo Ethernet products this helps to simplify the installation, operation and maintenance of individual devices and complete networks. Once a user is familiar with a Westermo product, that knowledge can be readily applied to all our other devices. A web screen simplifies the configuration of many functions, whilst a command line interface allows for fine tuning.

| WeOS Standard - Layer 2 protocols and functionality |
|---|
| **Resilience and High Availability** |
| FRNTv0/v2 flexible ring topologies (multiring, subrings and ring coupling), IEEE 802.1D/802.1w (RSTP), IEEE 802.1AX/802.3ad Link Aggregation (LACP and Static), IEC 62439-2 Media Redundancy Protocol (MRP; single instance or dual instances at MRP master)[a.] |
| **Layer 2 Switching** |
| IEEE 802.1D MAC Bridges, IEEE 802.1Q Static VLAN and VLAN Tagging, Q-in-Q Tunnelling, IEEE 802.1AB LLDP, IGMPv1/v2/v3 Snooping, Static Multicast MAC filters, MLDv1/v2 Snooping |
| **Layer 2 QoS** |
| IEEE 802.1p Class of Service with flexible classification (VLAN tag priority, IP DSCP/ToS, Port ID), MAC Authentication, IEEE 802.1X Port Access Control, Ingress and Egress Rate limiting |
| **IP Host Services** |
| Static IPv4/v6 Address, DHCP Client, DNS Client, DDNS, ZeroConf (mDNS and SSDP), NTP Client (NTPv4), IPv4/v6 Interfaces (Ethernet, VLAN, Loopback and Blackhole) |
| **Network Servers** |
| DHCP Server (including options 1, 3, 6, 7, 12, 15, 42, 61, 66, 68 and 82), DHCP Relay Agent (including options 54 and 82), DNS Proxy Server (DNS forwarder and Host records), NTP client/server (NTPv4) |
| **Management Tools** |
| Westermo configuration tool WeConfig, Web interface (HTTP and HTTPS), Command Line Interface (CLI) via console port, SSHv2 and Telnet, Local and Central Authentication (RADIUS/TACACS+), Role Based Access Control (RBAC), Password Compliance Policy, SNMPv1/v2c/v3, Secure Copy (SCP) for remote file upload and download, Local file management (via HTTP, FTP, TFTP and SCP), Load/save files from/to external memory[b.], Configuration and Deployment using external memory[b.], Tech support button, Flexible alarm and event handling system, RFC5424/RFC3164 Syslog (log files and remote syslog server), Port monitoring |
| **SNMP MIB Support (read-only)** |
| RFC 1213 MIB-2, RFC 2819 RMON MIB, RFC 2863 Interface MIB, RFC 3433 Entity Sensor MIB, RFC 3635 Ether-like Interface MIB, RFC 4133 Entity MIB, RFC 4188 Bridge MIB, RFC 4318 RSTP MIB, RFC 4363 Q-BRIDGE MIB, RFC 4836 MAU MIB, IEEE 802.1AB LLDP MIB, IEEE 802.1AX LAG MIB, IEC 62439-2 MRP MIB, WESTERMO-DDM MIB (SFP), WESTERMO-EVENT MIB, WESTERMO-FRNT MIB, WESTERMO-INTERFACE MIB, WESTERMO-TCN MIB |

[a.] Available as add-on-function. Please see your local Westermo sales contact to purchase a license for your product.

[b.] Only applicable for models with SD card slot

| WeOS Extended - Layer 3 protocols and functionality[a.] |
|---|
| **IP Host Services** |
| IP Interfaces (SSL, VPN, GRE) |
| **IP Routing and VPN** |
| Static IP Routing, Floating Static Routes, Multinetting, Proxy ARP, Dynamic IP routing (OSPFv2, RIPv1/v2), VRRPv2/v3, Protocol Independent Multicast - Sparse-Mode (PIM-SM), Static Multicast Routing, Stateful Inspection Firewall, Firewall Hit Counters, IP Masquerading (NAT/NAPT), Port Forwarding, Stateless NAT (1-1 NAT), IPsec VPN (IKEv2 PSK), SSL VPN (Client and Server, Certificate Authentication, Pre-shared Key (PSK) Point-to-Point Mode, Layer-2 and Layer-3 VPN, Layer-2 VPN bridging, Address pool and address per CN, TLS Authentication), Generic Routing Encapsulation (GRE), Policy Based Routing, Equal-Cost Multi-Path (ECMP), OpenVPN Multipath TCP (MPTCP), Route monitor |
| **SNMP MIB Support (read-only)** |
| RFC 2787 VRRPv2 MIB, RFC 6527 VRRPv3 MIB |

[a.] Products with software level WeOS Extended include all functionality listed for WeOS Standard