www.westermo.com

Viper 3520-PoE Series

20 port Ethernet M12 switches with Power over Ethernet

VIPER

Table of Contents

1. General Information 3
    1.1. Legal Information 3
    1.2. About This Guide 3
    1.3. Software Tools 3
    1.4. License and Copyright for Included FLOSS 3
    1.5. WeOS 3
    1.6. Integrity Seal 3
2. Safety and Regulations 4
    2.1. Warning Levels 4
    2.2. Safety Information 5
    2.3. Care Recommendations 7
    2.4. Product Disposal 7
    2.5. Compliance Information 8
        2.5.1. Agency Approvals and Standards Compliance 8
        2.5.2. EN/IEC 61010-2-201 Notice 8
        2.5.3. FCC Part 15.105 Class A Notice 8
        2.5.4. Simplified Declaration of Conformity 9
3. Product Description 10
    3.1. Product Description 10
    3.2. Available Models 10
    3.3. Hardware Overview 12
    3.4. Connector Pinout 13
    3.5. LED Indicators 16
    3.6. Dimensions 17
4. Installation 19
    4.1. Wall Mounting 19
    4.2. Protective Earth Connection 19
    4.3. Removal of Protective Caps 20
    4.4. Connection of Cables 20
    4.5. Cooling 21
    4.6. Replacement of Product 21
    4.7. EN 45545-2 Mounting Notes 21
5. Specifications 22
    5.1. Interface Specifications 22
    5.2. Type Tests and Environmental Conditions 27
6. Revision Notes 31

1. General Information

1.1. Legal Information

The contents of this document are provided "as is". Except as required by applicable law, no warranties of any kind are made in relation to the accuracy and reliability or contents of this document, either expressed or implied, including but not limited to the implied warranties of merchantability and fitness for a particular purpose. Westermo reserves the right to revise this document or withdraw it at any time without prior notice.

Under no circumstances shall Westermo be responsible for any loss of data or income or any special, incidental, and consequential or indirect damages howsoever caused.

More information about Westermo can be found at www.westermo.com .

1.2. About This Guide

This guide is intended for installation engineers and users of Westermo products.

It includes information on safety and regulations, a product description, installation instructions and technical specifications.

1.3. Software Tools

Related software tools are available at https://www.westermo.com/support/product-support.

1.4. License and Copyright for Included FLOSS

This product includes software developed by third parties, including Free/Libre Open Source Software (FLOSS). The specific license terms and copyright associated with the software are included in each software package respectively. Please visit the product web page for more information.

Upon request, the applicable source code will be provided. A nominal fee may be charged to cover shipping and media. Please direct any source code request to your normal sales or support channel.

1.5. WeOS

This product runs WeOS (Westermo Operating System). Instructions for quick start, configuration and factory reset are found in the WeOS user documentation at www.westermo.com.

1.6. Integrity Seal

To ensure that the product package has not been opened, there is an integrity seal. If the seal is unexpectedly broken or missing contact your support channel for advice.

2. Safety and Regulations

2.1. Warning Levels

Warning signs are provided to prevent personal injuries and/or damages to the product. The following levels are used:

Level of warning	Description	Consequence personal injury	Consequence material damage
WARNING	Indicates a potentially hazardous situation	Possible death or major injury	Major damage to the product
CAUTION	Indicates a potentially hazardous situation	Minor or moderate injury	Moderate damage to the product
NOTICE	Provides information in order to avoid misuse of the product, confusion or misunderstanding	No personal injury	Minor damage to the product
NOTE	Used for highlighting general, but important information	No personal injury	Minor damage to the product

Table 1. Warning levels

2.2. Safety Information

Before installation:

Read this manual completely and gather all information available on the product. Make sure it is fully understood. Check that your application does not exceed the safe operating specifications for the product.

SAFETY DURING INSTALLATION

The product must be installed and operated by qualified service personnel and installed into an apparatus cabinet or similar, where access is restricted to service personnel only.

Refer to chapter Compliance Information to see the required level of qualified service personnel according to safety standards.

Before energising and connecting communication cables to the product, ensure a protective earthing conductor is first connected to the protective earthing terminal (only valid for metallic housings). Westermo recommends a cross-sectional area of at least 4 mm^2.

Note that this product can be connected to two different power sources.

Upon removal of the product, disconnect the product from the power supply and all other communication ports before disconnecting the protective earthing conductor.

HAZARDOUS VOLTAGE

Do not open an energised product. Hazardous voltage may occur when connected to a power supply.

PROTECTIVE FUSE

The power supply wiring must be sufficiently fused. The fuse must be IEC 60127 certified and rated for T6A (HV models), T8A (P12 models) or T10A (LV models) and 250 V.

It must be possible to disconnect manually from the power supply. Ensure compliance to national installation regulations.

This product has no internal fuse and should be connected via an external fuse for protection.

REDUCE THE RISK OF FIRE
To reduce the risk of fire, use only telecommunication line cords with a cable diameter of AWG 26 or larger. Regarding power cable dimensions, see chapter Interface Specifications.

CABLE TEMPERATURE RATING FOR FIELD TERMINAL WIRES
There may be a requirement on the minimum temperature rating of the cable to be connected to the field wiring terminals, see chapter Interface Specifications.

ELECTROSTATIC DISCHARGE (ESD)
Prevent electrostatic discharge damage to internal electronic parts by discharging your body to a grounding point (e.g. use a wrist strap).

HOT SURFACE
Be aware that the surface of this product may become hot. When it is operated at high temperatures, the external surface may exceed Touch Temperature Limit according to the product's relevant electrical safety standard.

NOTE - MECHANICAL FORCE ON VENTILATION MEMBRANE
Do not cover or bring mechanical force to the ventilation membrane on the back of the product.

NOTICE - ADDITIONAL EMC TYPETESTS
For additional EMC typetests with powering via a CDN or similar high inductive filters, please contact Westermo for correct test setup.

2.3. Care Recommendations

Follow the care recommendations below to maintain full operation of the product and to fulfill the warranty obligations:

- Do not drop, knock or shake the product. Rough handling above the specification may cause damage to internal circuit boards.
- Use a dry or slightly water-damp cloth to clean the product. Do not use harsh chemicals, cleaning solvents or strong detergents.
- Do not paint the product. Paint can clog the product and prevent proper operation.

If the product is used in a manner not according to specification, the protection provided by the equipment may be impaired.

If the product is not working properly, contact the place of purchase, the nearest Westermo distributor office or Westermo technical support.

2.4. Product Disposal

This symbol means that the product shall not be treated as unsorted municipal waste when disposing of it. It needs to be handed over to an applicable collection point for recycling electrical and electronic equipment.

Proper disposal of the product helps minimize hazardous substances and prevents potential negative impacts on both the environment and human health.

Figure 1. WEEE symbol for treatment of product disposal

2.5. Compliance Information

2.5.1. Agency Approvals and Standards Compliance

Type	Approval/Compliance
Climate	• EN 50155 class OT4 / IEC 60571 class TX, Railway applications - Electronic equipment used on rolling stock • IEEE 1478 class 1, condition E4 (incl Salt Mist), Environmental conditions for transit rail car electronic equipment
EMC	• EN/IEC 61000-6-2, Immunity industrial environments • EN/IEC 61000-6-4, Emission industrial environments • EN 50121-3-2/IEC 62236-3-2 Railway applications – Rolling stock – apparatus • Tested and verified for Class S1, DB EMC Regulation 06, Commodity team Radio compatibility in VDB Rev 1.0 (Shunting Radio) • Tested and verified for FCC part 15b class A (CFR 47) • E-Mark, Road Vehicles, E1 10R-058942[a.]
Mechanical (Shock and vibration)	• EN 61373 category 1, class A and B • EN 60068-2-27 20 g, 11 ms and 100 g, 6 ms[b.]
Insulation (Coordination and test)	• EN 50124-1, Railway applications – Insulation coordination • EN 50155/IEC 60571, Railway applications - Electronic equipment used on rolling stock
Fire protection	• EN 45545-2, Fire protection on railway vehicles • NFPA 130, Fire protection for fixed guideway transit and passenger rail system
Cybersecurity	• IEC 62443-4-2 SL2, Security for industrial automation and control systems
Software	• EN 50657:2017 Software Onboard Rolling Stock (Basic Integrity)
Safety[c.]	• EN/IEC 61010-1, -2-201, Safety requirements for electrical equipment for measurement, control, and laboratory use

[a.] Applicable only for Viper-3520(-E)-T12-P8-LV and Viper-3520(-E)-T2G-P2G-T10-P6-LV

[b.] Not applicable for Viper-3520(-E)-T2G-P2G-T6-P10-HV

[c.] Applicable only for Viper-HV models

Table 2. Agency approvals and standards compliance

2.5.2. EN/IEC 61010-2-201 Notice

This product has been tested and found compliant to EN/IEC 61010-2-201, Safety requirements for electrical equipment for measurement, control, and laboratory use. In accordance with the definitions of the standard, this product shall be handled by skilled service personnel.

2.5.3. FCC Part 15.105 Class A Notice

This product has been tested and found to comply with the limits for a Class A digital device, pursuant to Part 15 of the FCC Rules.

These limits are designed to provide reasonable protection against harmful interference when the product is operated in a commercial environment.

This product generates, uses, and can radiate radio frequency energy and, if not installed and used in accordance with the user manual, may cause harmful interference to radio communications. Operation of this product in a residential area is likely to cause harmful interference in which case the user will be required to correct the interference at the users own expense.

2.5.4. Simplified Declaration of Conformity

Hereby, Westermo declares that this product is in compliance with applicable EU directives. The full declaration of conformity and other detailed information is available at www.westermo.com/support/product-support.

Figure 2. The European Conformity Assessment marking

3. Product Description

3.1. Product Description

The Viper 3520-PoE series consists of managed 20 port routing switches optimised for the needs of the railway rolling stock market. PoE ports offer effective powering of end-devices. Gbps ports cope with high bandwidth devices such as access points and NVRs (Network Video Recorders).

The Viper 3520-PoE series is designed to withstand the tough environment on-board trains, exposing the switch to constant vibration, extreme temperatures, humidity and a demanding electrical environment.

A GORE-TEX® membrane prevents internal condensation. Threading integrated in chassis provides for additional vibration resistance. High-level isolation between all interfaces enables direct connectivity to vehicle auxiliary power and protects against overvoltage and flashover. IP67 protection prevents ingress of water and dust. An overall optimised design results in an extremely compact package in combination with very high MTBF for easy integration and low lifecycle cost.

Thorough type testing at independent ISO/IEC 17025 and ILAC MRA certified labs, accredited to a wide range of standards, show that the Viper series fulfills EN 50155 and other requirements. The state-of-the-art Westermo production facility ensures the quality of each individual unit, e.g. through temperature cycling burn-in testing.

The WeOS operating system offers an extensive suite of IP networking features for resilient and flexible networks, e.g. the FRNT ring protocol with very fast failover. The powerful layer 3 routing capability is very useful for separating networks in complex applications. The backup device accessory matches the Viper in robustness and offers easy configuration update and backup.

Meeting the requirements of the railcar market, the Viper 3520-PoE series is very well suited for deployment in any other application with severe operating conditions and tough environments, for instance in the mining industry.

3.2. Available Models

All switches are managed and have eight PoE ports. Viper 3520A-PoE is used when referring to both layer 2 and layer 3 models.

Art. no.	Model	SW	Gbps ports	HV	LV
3635-1015	Viper-3520-T12-P8-HV	Layer 2	-	48 - 110 V	
3635-1315	Viper-3520-T2G-P2G-T10-P6-HV	Layer 2	4	48 - 110 V	
3635-1510	Viper-3520-T2G-P2G-T6-P10-HV	Layer 2	4	48 - 110 V	
3635-1115	Viper-3520-T12-P8-LV	Layer 2	-		24 - 38 V
3635-1415	Viper-3520-T2G-P2G-T10-P6-LV	Layer 2	4		24 - 38 V
3635-1025	Viper-3520-E-T12-P8-HV	Layer 3	-	48 - 110 V	
3635-1325	Viper-3520-E-T2G-P2G-T10-P6-HV	Layer 3	4	48 - 110 V	
3635-1520	Viper-3520-E-T2G-P2G-T6-P10-HV	Layer 3	4	48 - 110 V	
3635-1125	Viper-3520-E- T12-P8-LV	Layer 3	-		24 - 38 V
3635-1425	Viper-3520-E-T2G-P2G-T10-P6-LV	Layer 3	4		24 - 38 V

Table 3. Available models

3.3. Hardware Overview

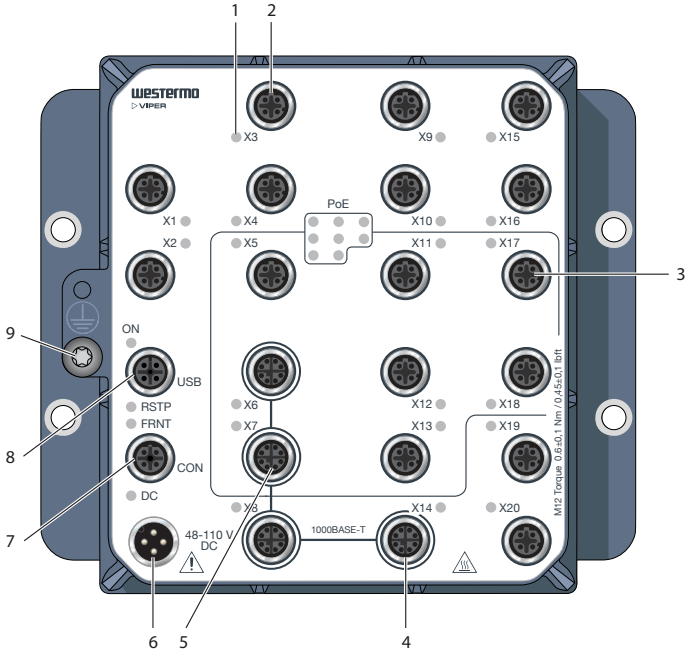

No.	Description	No.	Description
1	LED indicator	2	100 Mbps port
3	100 Mbps PoE port	4	Gbps ports
5	Gbps PoE port	6	Power connection
7	Console port	8	USB port
9	Protective earth connection		

Figure 3. Location of interface ports and LED indicators, illustrated by a Viper-3520(-E)-T2G-P2G-T10-P6-HV

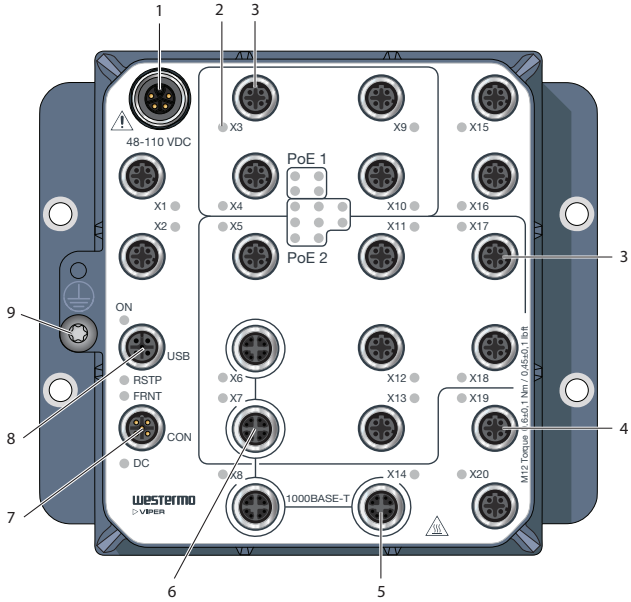

No.	Description	No.	Description
1	Power connection	2	LED indicator
3	100 Mbps PoE port	4	100 Mbps port
5	Gbps ports	6	Gbps PoE port
7	Console port	8	USB port
9	Protective earth connection		

Figure 4. Location of interface ports and LED indicators, illustrated by a Viper-3520(-E)-T2G-P2G-T6-P10-HV

3.4. Connector Pinout

Pin no.	Signal	Illustration
1	+DC1	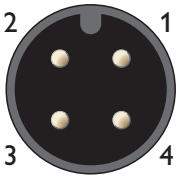
2	+DC1	
3	-COM	
4	-COM	

Table 4. Power connector HV, male, A-coded

Pin no.	Signal	Illustration
1	+DC1	
2	+DC1	
3	-COM	
4	-COM	

Table 5. Power connector LV, male, T-coded

Pin no.	Signal	Illustration
1	+DC	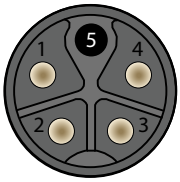
2	-COM	
3	-COM	
4	+DC	
5	NC	

Table 6. Power connector HV, male, K-coded

The Viper series has single power connection. Dual pins shall be connected to the power supply (+DC1 for positive terminal, -COM for negative terminal) in order to distribute the current over two pins

Pin no.	Signal	Illustration
1	NC	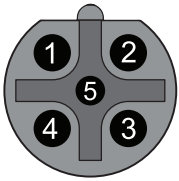
2	TX	
3	RX	
4	NC	
5	GND	

Table 7. Console connector, female, B-coded

Pin no.	Signal	Illustration
1	D-	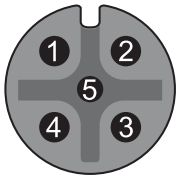
2	VBUS	
3	NC	
4	D+	
5	GND	

Table 8. USB connector, female, A-coded

Pin no.	Signal	Illustration
1	TD+	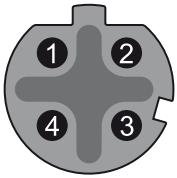
2	RD+	
3	TD-	
4	RD-	
MDI, MDI-X and auto MDI/MDI-X modes are supported. The table shows signals in MDI mode.		

Table 9. 100 Mbps Ethernet connector, female, D-coded

Pin no.	Signal	Illustration
1	DA+	
2	DA-	
3	DB+	
4	DB-	
5	DD+	
6	DD-	
7	DC-	
8	DC+	

Table 10. Gbps connector, female, X-coded

3.5. LED Indicators

LED	Status	Description
ON	OFF	Product has no power
	GREEN	All OK, no alarm condition
	RED	Alarm condition, or until product has started up. (Alarm conditions are configurable, see *WeOS4 Management Guide*)
	BLINK	Location indicator ("Here I am!"). Activated when connected to WeConfig tool, or upon request from web or/and CLI. RED BLINK during boot indicates pending cable factory reset.
RSTP	OFF	RSTP disabled
	GREEN	RSTP enabled
	BLINK	Product selected as RSTP/STP root switch
FRNT	OFF	FRNT disabled
	GREEN	FRNT OK
	RED	FRNT error
	FLASH	Product configured as FRNT focal point
DC	OFF	Product has no power
	GREEN	Power OK. Input voltage > 70% of minimum nominal voltage
	RED	Power failure. Input voltage < 70 % of minimum nominal voltage
X1 to X20	OFF	No link
	GREEN	Link established
	GREEN FLASH	Data traffic indication
	YELLOW	Port alarm, or port is set in blocking state by link redundancy protocol
PoE	OFF	Port does not consume PoE power
	GREEN	Port consumes PoE power

Table 11. LED indicators

3.6. Dimensions

Dimensions are stated in mm.

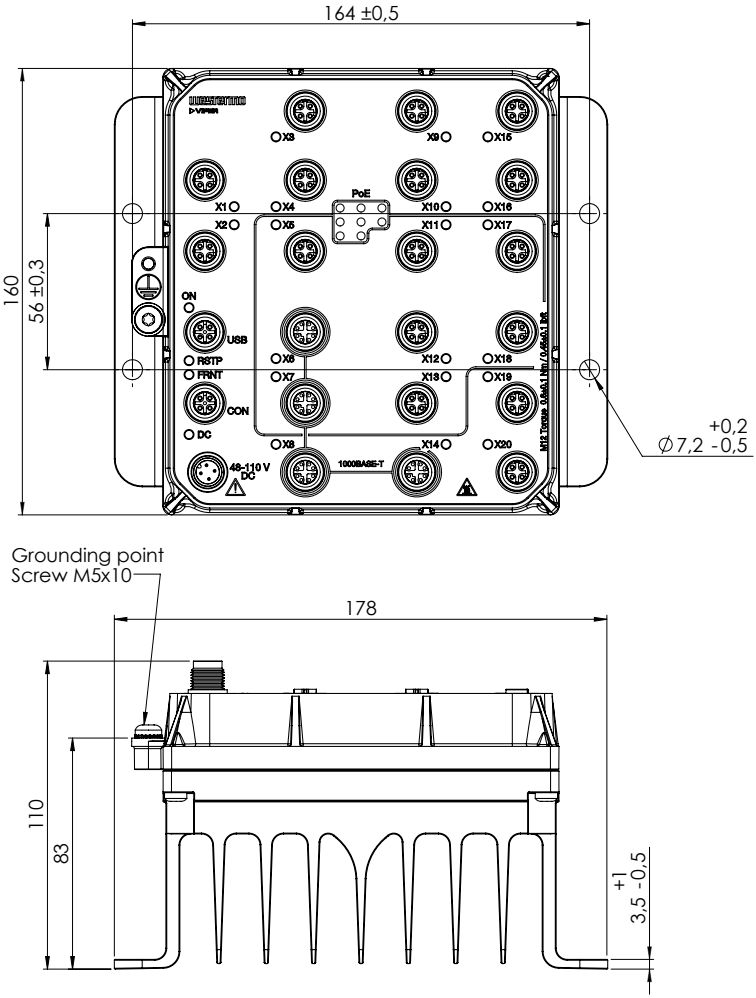

Figure 5. Dimensional drawing Viper-3520(-E)-T12-P8 and Viper-3520(-E)-T2G-P2G-T10-P6 models

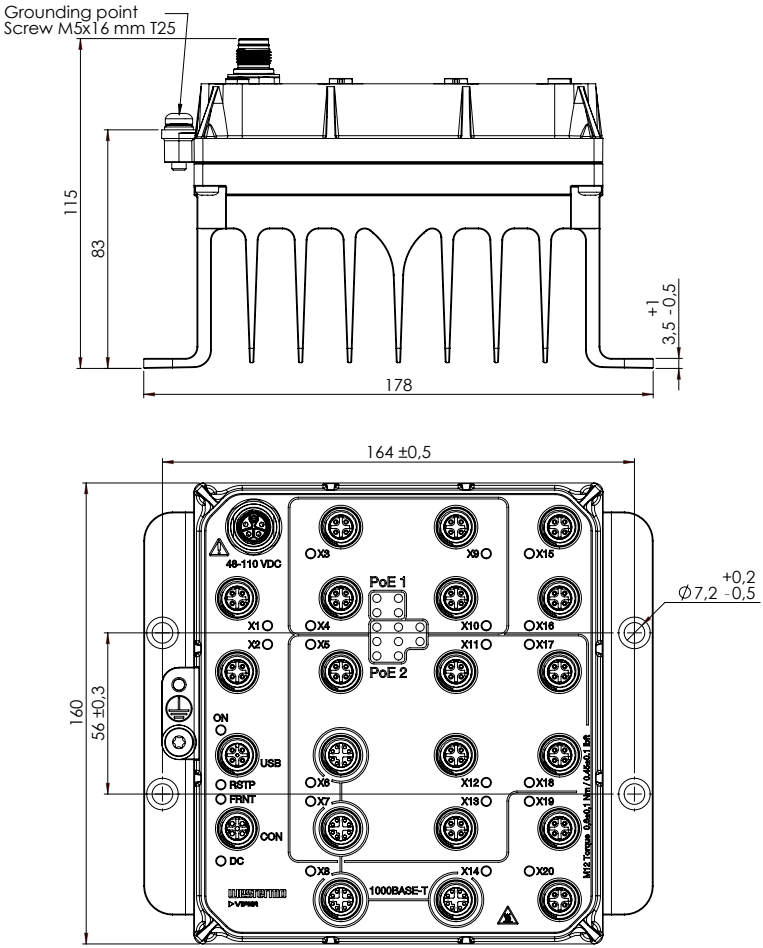

Figure 6. Dimensional drawing Viper-3520(-E)-T2G-P2G-T6-P10-HV

4. Installation

4.1. Wall Mounting

The product can be wall mounted vertically or horizontally. There are four pieces of 7 mm bores for this. Use four M5, M6 or 1/4" screws with 12 mm washers on a flat and stable surface.

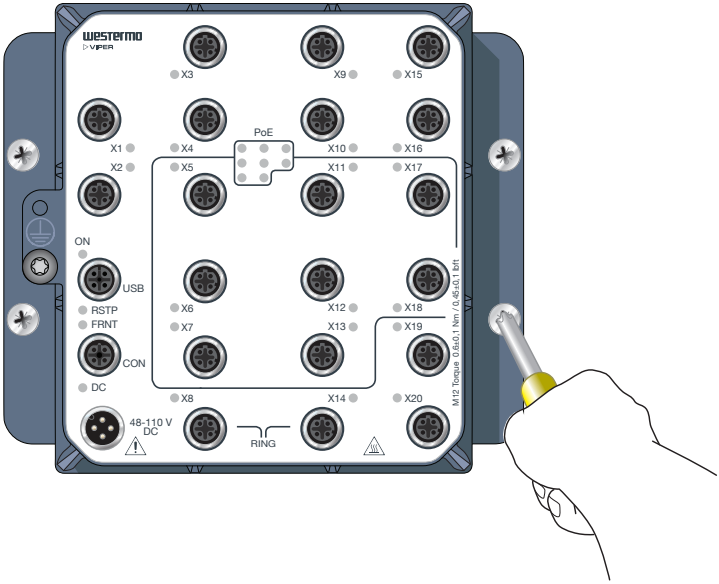

Figure 7. Wall mounting

4.2. Protective Earth Connection

For correct function, the earth connection needs to be properly connected to a designated PE rail. Torx: T25 and torque: 3.2 Nm.

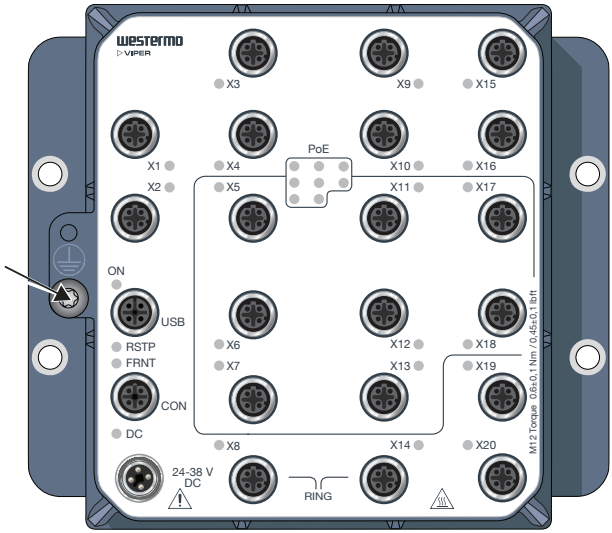

Figure 8. Earth connection

4.3. Removal of Protective Caps

Protective caps shall only be removed using a Torx T40 bit or a flat-blade screwdriver (1.2 × 8 mm). Carefully insert the tool into the slot of the protective cap and turn it counter-clockwise until the cap can be removed.

NOTE
Do not use any other tools, as they may damage the protective cap or the connector.

4.4. Connection of Cables

Recommended tightening torque for the M12 connectors is 0.6 Nm. All M12 connections are screw connections.

When connecting the power cable, ensure that the pins are connected correctly before tightening the power cable to the unit.

PROTECTIVE FUSE
The power supply wiring must be sufficiently fused. The fuse must be IEC 60127 certified and rated for T6A (HV models), T8A (P12 models) or T10A (LV models) and 250 V.

It must be possible to disconnect manually from the power supply. Ensure compliance to national installation regulations.

This product has no internal fuse and should be connected via an external fuse for protection.

NOTE - UNUSED CONNECTORS
Unused connectors must be covered by a protective cap (delivered with the product), tightened to the specified torque in order to fulfill the specified ingress protection code.

4.5. Cooling

This product relies on convection cooling. Make sure that it is installed so that the ambient temperature is within the specified temperature range. Avoid obstruction of the airflow around the product.

4.6. Replacement of Product

Disconnect all cables and unscrew the product from the wall. Mount the replacement product and reconnect all cables, observing the instructions in Connection of Cables [20]. For easy replication of the configuration of the original product, it is recommended to have the Westermo USB plug permanently connected to the USB port and move it over to the replacement product before it is powered up.

MTTR (Mean Time To Repair), i.e. time for replacement of product is: < 15 minutes.

HOT SURFACE
Be aware that the surface of this product may become hot. When it is operated at high temperatures, the external surface may exceed Touch Temperature Limit according to the product's relevant electrical safety standard.

4.7. EN 45545-2 Mounting Notes

Two product can be mounted together and as a single interior non-listed group in the sense of EN 45545-2 definitions. For multiple product, the spacing requirements for interior non-listed groups must be met.

5. Specifications

5.1. Interface Specifications

DC, Power port	
Rated voltage[a.]	Viper-LV units: 24 to 38 VDC Viper-HV units: 48 to 110 VDC
Operating voltage[b.]	Viper-LV units: 16.8 to 49.9 VDC (14.4 VDC for 100 ms and 53.2 VDC for 1 s) Viper-HV units: 33.6 to 143 VDC (28.8 VDC for 100 ms and 154 VDC for 1 s)
Rated current	Viper-LV units: max 5.0 A at 24 VDC, max 3.2 A at 38 VDC Viper-P6-HV units: max 2.6 A at 48 VDC, max 1.1 A at 110 VDC Viper-P10-HV units: max 4.2 A at 48 VDC, max 1.8 A at 110 VDC
Rated frequency	DC
Inrush current	Viper-LV units: 580 mA^2s at 24 VDC, 560 mA^2s at 38 VDC Viper-P6-HV units: 200 mA^2s at 48 VDC, 160 mA^2s at 110 VDC Viper-P10-HV units: 490 mA^2s at 48 VDC, 740 mA^2s at 110 VDC
Startup current	Viper-LV units: 1.8 A at 16.8 VDC Viper-P6-HV units: 750 mA at 33.6 VDC Viper-P10-HV units: 1.0 A at 33.6 VDC
Polarity	Reverse polarity protected
Redundant power input	No
Isolation	2250 VDC to all other ports
Circuit type	Secondary circuit hazardous voltage, OVC II
Connector	Viper-LV units: 4-pin, male, M12, T-coded, recommended Westermo cable: 3146-1109 for 5 m Viper-P6-HV units: 4-pin, male, M12, A-coded, recommended Westermo cables: 3146-1106 for 1.5 m, 3146-1107 for 5 m Viper-P10-HV units: 5-pin, male, M12, K-coded
Cable size	For Viper-P6-LV and all Viper-P10 units: M12, recommended power cable area 1 mm^2 (minimum 0.75 mm^2), which correlates to AWG 18 or larger Cable dimensions depend on choice of M12 connector For Viper-P6-HV units: M12, recommended power cable area 0.5 mm^2 (minimum 0.25 mm^2), which correlates to AWG 21 or larger
Cable temperature rating	For minimum temperature rating of the cable to be connected to the field wiring terminals: -40 to +70 °C

[a.] Also referred to as nominal voltage in EN/IEC 61010-1

[b.] Also referred to as nominal input including fluctuations in EN/IEC/UL 61010-1

100 Mbps ports, non PoE[a.]	
Electrical specification	IEEE std 802.3
Data rate	10 Mbps, 100 Mbps, manual or auto
Duplex	Full or half, manual or auto
Circuit type	TNV-1
Transmission range	Up to 150 m with CAT5e cable or better
Isolation	2250 VDC to all other ports[b.]
Connector	4-pin, female, M12, D-coded, auto MDI/MDI-X, recommended Westermo cables: 3146-1100 M12-M12 - 1 m 3146-1101 M12-M12 - 5 m 3146-1103 RJ45-M12 - 1 m 3146-1104 RJ45-M12 - 5 m
Shielded cable	Shielded cable CAT5e or better is recommended
Conductive chassis	Yes
FRNT reconfiguration time	Typically below 20 ms

[a.] 100 Mbps ports, non-PoE, are:
X1-X4, X8-X10, X14-X16, X19-X20 on Viper-3512(-E)-T12-P8 models
X1-X4, X9-X10, X15-X16, X19-X20 on Viper-3520(-E)-T2G-P2G-T10-P6 models
X1-X2, X15-X16, X19-X20 on Viper-3520(-E)-T2G-P2G-T6-P10-HV

[b.] 750 VDC after damp heat, according to EN 50155

Gbps ports, non-PoE[a.]	
Electrical specification	IEEE std 802.3
Data rate	10 Mbps, 100 Mbps, 1000 Mbps, manual or auto
Duplex	Full or half, manual or auto
Circuit type	TNV-1
Transmission range	Up to 100 m with CAT5e cable or better
Isolation	2250 VDC to all other ports[b.]
Connector	8-pin, female, M12, X-coded
Shielded cable	Shielded cable CAT5e or better is recommended
Conductive chassis	Yes
FRNT reconfiguration time	Typically below 20 ms

[a.] Gbps ports, non-PoE are: X8, X14 on Viper-3520(-E)-T2G-P2G-T10-P6 models
Gbps ports, non-PoE are: X8, X14 on Viper-3520(-E)-T2G-P2G-T6-P10-HV

[b.] 750 VDC after damp heat, according to EN 50155

PoE ports, 100 Mbps[a.]	
Output voltage	54 VDC, ±5%
Output power[b.]	Max. 30 W on one port (PoE+) Max. 80 W in total on all ports for Viper-3520(-E)-T12-P8 models Max. 160 W in total on all ports, 80 W in total per PoE group 1 and 2 for Viper-3520(-E)-P10 models
Electrical specification	IEEE std 802.3
Data rate	10 Mbps, 100 Mbps, manual or auto
Duplex	Full or half, manual or auto
Circuit type	TNV-1
Transmission range	Up to 100 m with CAT5e cable or better
Isolation	2250 VDC to all other ports[c.]
Connector	4-pin, female, M12, D-coded, auto MDI/MDI-X, recommended Westermo cables: 3146-1100 M12-M12 - 1 m 3146-1101 M12-M12 - 5 m 3146-1103 RJ45-M12 - 1 m 3146-1104 RJ45-M12 - 5 m
Shielded cable	Shielded cable CAT5e or better is recommended
Conductive chassis	Yes
FRNT reconfiguration time	Typically below 20 ms

[a.] PoE ports are:
X5-X7, X11-X13, X17-X18 on Viper-3520(-E)-T12-P8 models
X5, X11-X13, X17-X18 on Viper-3520(-E)-T2G-P2G-T10-P6 models
X3-X4, X9-X10 PoE group 1 and X5, X11-X13, X17-X18 PoE group 2 on Viper-3520(-E)-T2G-P2G-T6-P10-HV

[b.] As delivered by Power Sourcing Equipment, i.e. the Viper 3520-PoE switch. Power available at Powered Device is depending on the cable resistance.

[c.] 750 VDC after damp heat, according to EN 50155

PoE ports, Gbps[a.]	
Output voltage	54 VDC, ±5%
Output power[b.]	Max 30 W on one port (PoE+) Max 80 W in total on all ports for Viper-3520(-E)-P6 and Viper-3520(-E)-P8 models Max. 160 W in total on all ports, 80 W in total per PoE group 1 and 2 for Viper-3520(-E)-P10 models
Electrical specification	IEEE std 802.3
Data rate	10 Mbps, 100 Mbps, 1000 Mbps, manual or auto
Duplex	Full or half, manual or auto
Circuit type	TNV-1
Transmission range	Up to 100 m with CAT5e cable or better
Isolation	2250 VDC to all other ports[c.]
Connector	8-pin, female, M12, X-coded
Shielded cable	Shielded cable CAT5e or better is recommended
Conductive chassis	Yes
FRNT reconfiguration time	Typically below 20 ms

[a.] PoE ports are:
X6-X7 on Viper-3520(-E)-T2G-P2G-T10-P6-HV/LV
X6-X7 PoE group 2 on Viper-3520(-E)-T2G-P2G-T6-P10-HV

[b.] As delivered by Power Sourcing Equipment, i.e. the Viper 3520-PoE switch. Power available at Powered Device is depending on the cable resistance.

[c.] 750 VDC after damp heat, according to EN 50155

NOTE
PoE ports are not isolated from each other.

NOTE
PoE ports within groups 1 and 2 **are not** isolated from each other. PoE group 1 and PoE group 2 **are** isolated from each other.

USB port	
Electrical specification	USB 2.0 host interface
Data rate	Up to 480 Mbps (high-speed mode)
Maximum supply current	200 mA
Circuit type	SELV
Isolation	To all Ethernet and DC ports No isolation to CON or protective earth
Connector	5-pin, female, M12, A-coded, recommended Westermo USB plug 3641-0190

Console port	
Electrical specification	RS-232
Data rate	115.2 kbit/s
Data format	8 data bits, no parity, 1 stop bit, no flow control
Circuit type	SELV
Isolation	To all Ethernet and DC ports No isolation to USB or protective earth
Connector	5-pin, female, M12, B-coded, recommended Westermo cables: 1211-2215 (serial port) or 1211-4073 (USB)

5.2. Type Tests and Environmental Conditions

Environmental phenomena	Basic standard	Description	Test levels
ESD	EN 61000-4-2	Enclosure	Contact: ±6 kV Air: ±8 kV
Fast transients	EN 61000-4-4	Power port	± 2 kV
		Signal ports	
		Earth port	
Surge	EN 61000-4-5	Power port	L-E: ± 2 kV, 42 Ω, 0.5 µF, 1.2/50 µs L-E: ± 1 kV, 12 Ω, 9 µF, 1.2/50 µs L-L: ± 2 kV, 42 Ω, 0.5 µF, 1.2/50 µs L-L: ± 0.5 kV, 2 Ω, 18 µF, 1.2/50 µs
		Ethernet port	L-E: ± 2 kV, 2 Ω
Pulsed magnetic field	EN 61000-4-9	Enclosure	300 A/m
Power frequency magnetic field	EN 61000-4-8	Enclosure	100 A/m; 16.7, 50, 60 Hz 300 A/m; 0 Hz
Power interruption			Class S2 (10 ms hold-up)
Radiated RF immunity	EN 61000-4-3	Enclosure	20 V/m at (80 MHz to 2 GHz) 10 V/m at (2-6 GHz) 1 kHz sine, 80% AM
Conducted RF immunity	EN 61000-4-6	Power port	10 V, 80% AM, 1 kHz; (0.15-80) MHz
		Ethernet ports	
		Earth port	
Radiated RF emission	CISPR 16-2-3	Enclosure	EN 61000-6-4 (30-6000 MHz) EN 50121-3-2 (30-6000 MHz) EN 50121-4 Class S1, DB and SBB Shunting radio, Spot freq. 419.73 MHz – 925 MHz
	ANSI C63,4		FCC Part 15 B Class A (30-6000 MHz)
Conducted RF emission	CISPR 16-2-1	Power port	EN 50121-4 (0.15-30 MHz) IEC 62236-4 (0.15-30 MHz) EN 50121-3-2 (0.15-30 MHz) EN 61000-6-4 (0.15-30 MHz)
	CISPR 32	Ethernet ports	EN 61000-6-4
Dielectric strength	EN 50155	Power port to all other ports	2250 VDC, 1 min
		Ethernet ports to all other ports	2250 VDC, 1 min
		Gbps Ethernet ports to all other ports	2250 VDC, 1 min[a.]

Environmental phenomena	Basic standard	Description	Test levels
		PoE ports to all other ports[b.]	2250 VDC, 1 min[a.]

[a.] 750 VDC after damp heat, according to EN 50155

[b.] PoE ports are not isolated to each other, except on a functional level.

Table 12. EMC and electrical conditions

Environmental phenomena	Basic standard	Description	Test levels
Temperatures	EN 60068-2-1 EN 60068-2-2	Operational	-40 to +70°C (-40 to +158°F)[a.,b.]
		Storage and transport	-55 to +85°C (-67 to +185°F)
Humidity	EN 60068-2-30	Operational	5-95 % relative humidity
		Storage and transport	
Altitude		Operational	2000 m/80 kPa
Service life		Operational	20 years according to IEC/TR 62380
MTBF	1: MIL-217F2, GB, 25°C (+77°F) 2: IEC 62380		*Viper-3520(-E)-T12-P8-LV* 1: 367,000 h *Viper-3520(-E)-T12-P8-HV* 1: 366,500 h *Viper-3520(-E)-T2G-P2G-T10-P6-LV* 1: 363,000 h *Viper-3520(-E)-T2G-P2G-T10-P6-HV* 1: 362,500 h *Viper-3520(-E)-T2G-P2G-T6-P10-HV* 1: 339,000 h, 2: 389,000 h
Vibration	IEC 60068-2-6 (sine)	Operational	2 g rms 5-500 Hz, 5 sweeps
	IEC 60068-2-64 (random)	Non-operational long life simulation	11.44 m/s² rms 5-150 Hz, 5 hours
		Operational functional random	2.3 m/s^2 rms 5-2000 Hz, 1.5 hours
Shock	IEC 60068-2-27	Operational	10 g, 30 ms, half sine 20 g, 11 ms, saw tooth 100 g, 6 ms, half sine[c.]
Weight			2.5 kg
Degree of protection	EN 60529	Enclosure	IP66, IP67
Cooling			Convection
Overvoltage category	EN/IEC 61010-1, 2-201		OVC II
Pollution degree	EN/IEC 61010-1, 2-201		PD3 macro environment and PD2 micro environment[d.]
	EN 50124-1		PD2
Location	EN/IEC 61010-1		Outdoor, wet locations
	IEEE 1478		Class 1, condition E4. Indoor

[a.] Refer to "Safety and Regulations" chapter regarding touch temperature

[b.] Operational at +85°C for a limited time

[c.] Not applicable for Viper-3520(-E)-T2G-P2G-T6-P10-HV

[d.] Installation and maintenance shall be made under controlled environments.

Table 13. Environmental and mechanical conditions

6. Revision Notes

Revision	Date	Change description
Rev. E	2026-10	4.3 Removal of Protective Caps added
Rev. D	2026-08	3.4 Hardware Overview (typo with model name for the 2nd illustration updated), 3.6 Dimensions updated (typo with model names updated)
Rev. C	2026-01	2.5.1 Agency Approvals and Standards Compliance updated (footnote removed from Cybersecurity), 3.2 Available Models; two products removed (3635-1610/1620), 3.4 Connector Pinout updated (USB, pin 1 and 4)
Rev. B	2025-03	1.6 Integrity Seal; new chapter
Rev. A	2024-10	First version

Westermo • Metallverksgatan 6, SE-721 30 Västerås, Sweden
Tel +46 16 42 80 00 Fax +46 16 42 80 01
E-mail: info@westermo.com
www.westermo.com

6641-22525 REV.E 2026 10 @ Westermo Network Technologies AB, Sweden