www.westermo.com

# Viper-008

## Unmanaged 8-port Ethernet Switch

# General Information

## Legal Information

The contents of this document are provided “as is”. Except as required by applicable law, no warranties of any kind are made in relation to the accuracy and reliability or contents of this document, either expressed or implied, including but not limited to the implied warranties of merchantability and fitness for a particular purpose. Westermo reserves the right to revise this document or withdraw it at any time without prior notice.

Under no circumstances shall Westermo be responsible for any loss of data or income or any special, incidental, and consequential or indirect damages howsoever caused.

More information about Westermo can be found at **www.westermo.com**

# Safety and Regulations

Warning signs are provided to prevent personal injury and/or damages to the product.

The following levels are used:

| Level of warning | Description | Consequence personal injury | Consequence material damage |
|---|---|---|---|
| WARNING | Indicates a potentially hazardous situation | Possible death or major injury | Major damage to the product |
| CAUTION | Indicates a potentially hazardous situation | Minor or moderate injury | Moderate damage to the product |
| NOTICE | Provides information in order to avoid misuse of the product, confusion or misunderstanding | No personal injury | Minor damage to the product |
| NOTE | Used for highlighting general, but important information | No personal injury | Minor damage to the product |

## Before Installation

Read this manual completely and gather all information on the product. Make sure that you understand it fully. Check that your application does not exceed the safe operating specifications for this product.

### SAFETY DURING INSTALLATION

The product must be installed and operated by qualified service personnel and installed into an apparatus cabinet or similar, where access is restricted to service personnel only.

Refer to chapter Compliance Information to see the required level of qualified service personnel according to safety standards.

Before energising and connecting communication cables to the product, ensure a protective earthing conductor is first connected to the protective earthing terminal (only valid for metallic housings). Westermo recommends a cross-sectional area of at least 4 mm2.

Upon removal of the product, disconnect the product from the power supply and all other communication ports before disconnecting the protective earthing conductor

### HAZARDOUS VOLTAGE

Do not open an energized product. Hazardous voltage may occur when connected to a power supply.

### PROTECTIVE FUSE

The power supply wiring must be sufficiently fused. The fuse must be IEC 60127 certified and rated for T1.25 A and 250 V.

It must be possible to disconnect manually from the power supply. Ensure compliance to national installation regulations.

This product has no internal fuse and should be connected via an external fuse for protection.

## REDUCE THE RISK OF FIRE

To reduce the risk of fire, use only telecommunication line cords with a cable diameter of AWG 26 or larger. Regarding power cable dimensions, see Interface Specifications.

## HOT SURFACE

Be aware that the surface of this product may become hot. When it is operated at high temperatures, the external surface may exceed Touch Temperature Limit according to the product's relevant electrical safety standard.

## ELECTROSTATIC DISCHARGE (ESD)

Prevent electrostatic discharge damages to internal electronic parts by discharging your body to a grounding point (e.g. use a wrist strap).

## Care Recommendations

Follow the care recommendations below to maintain full operation of product and to fulfill the warranty obligations:

- Do not drop, knock or shake the product. Rough handling above the specification may cause damage to internal circuit boards.
- Use a dry or slightly water-damp cloth to clean the product. Do not use harsh chemicals, cleaning solvents or strong detergents.
- Do not paint the product. Paint can clog the product and prevent proper operation.

If the product is used in a manner not according to specification, the protection provided by the equipment may be impaired.

If the product is not working properly, contact the place of purchase, nearest Westermo distributor office or Westermo technical support.

## Product Disposal

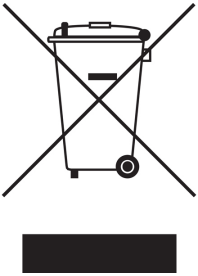

This symbol means that the product shall not be treated as unsorted municipal waste when disposing of it. It needs to be handed over to an applicable collection point for recycling electrical and electronic equipment.

By ensuring this product is disposed of correctly, you will help to reduce hazardous substances and prevent potential negative consequences to both environment and human health, which could be caused by inappropriate disposal.

# Compliance Information

## Agency Approvals and Standards Compliance

| Type | Approval / Compliance |
|---|---|
| EMC | EN 61000-6-1, Immunity residential environments |
| | EN 61000-6-2, Immunity industrial environments |
| | EN 61000-6-4, Emission industrial environments |
| | EN 50121-3-2, Railway applications - EMC: Rolling stock - Apparatus |
| | EN 50121-4, Railway signalling and telecommunications apparatus |
| | IEC 62236-4, Railway signalling and telecommunications apparatus |
| Environmental | EN 50155, Railway applications - Electronic equipment used on rolling stock |
| | EN 61373, Railway applications - Rolling stock equipment, shock and vibration tests |
| | EN 50124-1, Railway applications - Insulation coordination |
| | IEC 60028-2-27, (shock 10 g, 11 ms), IEC 60068-2-64 |
| | IEEE 1478, Environmental conditions for transit rail car electronic equipment |
| Fire protection | EN 45545-2, Fire protection on railway vehicles |
| Safety | EN/IEC/UL 62368-1, Safety Requirements for audio/video, information and communication technology equipment |

## EN/IEC/UL 62368-1 Notice

This product has been tested and found compliant to EN/IEC/UL 62368-1, Safety for Communication Technology. In accordance with the definitions of the standard, this product shall be handled by ordinary personnel. Energy source classifications are according to following:

| EN/IEC/UL 62368-1 notice | | |
|---|---|---|
| Electrical energy source | Power port | ES1 (at 24 VDC)<br>ES3 (at 110 VDC) |
| | Serial port | ES1 |
| | Ethernet port | ES1, TNV-1 |
| Power source | Power port | PS3 |
| Thermal energy source | Enclosure | TS1 |
| Mechanical energy source | Enclosure | MS1 (MS3 for wall or ceiling mounting) |
| Radiation energy source | N/A | N/A |

## FCC Part 15.105 Notice:

This equipment has been tested and found to comply with the limits for a Class B digital device, pursuant to Part 15 of the FCC Rules. These limits are designed to provide reasonable protection against harmful interference in a residential installation. This equipment generates, uses and can radiate radio frequency energy and, if not installed and used in accordance with the instructions, may cause harmful interference to radio communications. However, there is no guarantee that interference will not occur in a particular installation. If this equipment does cause harmful interference to radio or television reception, which can be determined by turning the equipment off and on, the user is encouraged to try to correct the interference by one or more of the following measures:

- Reorient or relocate the receiving antenna
- Increase the separation between the equipment and receiver
- Connect the equipment into an outlet on a circuit different from that to which the receiver is connected
- Consult the dealer or an experienced radio/TV technician for help.

## Declaration of Conformity

Hereby, Westermo declares that this product is in compliance with applicable EU directives and UK legislations. The full declaration of conformity and other detailed information is available at **www.westermo.com/support/product-support**.

## Type Tests and Environmental Conditions

| Phenomena | Test | Description | Test levels |
|---|---|---|---|
| ESD | EN 61000-4-2 | Enclosure contact | ± 6 kV (crit A) |
| | | Enclosure air | ± 8 kV (crit A) |
| RF field AM modulated | IEC 61000-4-3 | Enclosure | 20 V/m 80% AM (1 kHz), 80 - 2500 MHz (crit A)<br>10 V/m 80% AM (1 kHz), 2700 - 6000 MHz (crit A) |
| Fast transient | EN 61000-4-4 | Ethernet ports | ± 2 kV (crit A) |
| | | Power port | ± 2 kV (crit A) |
| | | Earth port | ± 2 kV (crit A) |
| Surge | EN 61000-4-5 | Fault port | ± 2 kV line to earth (crit A) |
| | | Ethernet ports | ± 2 kV line to earth (crit A) |
| | | Power port | ± 2 kV line to earth, ± 2 kV line to line (crit A) |
| RF conducted | EN 61000-4-6 | Ethernet ports | 10 V 80% AM (1 kHz), 0.15 - 80 MHz (crit A) |
| | | Power port | 10 V 80% AM (1 kHz), 0.15 - 80 MHz (crit A) |
| Power frequency magnetic field | EN 61000-4-8 | Enclosure | 1000 A/m 50 Hz<br>300 A/m 16.7 Hz, 60 Hz, DC (crit A) |
| Pulse magnetic field | EN 61000-4-9 | Enclosure | 300 A/m (crit A) |
| Voltage dips and interruption | EN 50155 | DC power ports | 10 ms interruption, 100 ms ±40% voltage variation |
| Radiated emission | CISPR 16-2-3<br>ANSI C63.4<br>(FCC part 15) | Enclosure | Class B (30 - 6000 MHz) |
| Conducted emission | CISPR 16-2-1 | DC power port & Ethernet ports | Class B |
| Dielectric strength | EN 50155 | Ethernet ports to other isolated ports | 500 VAC 1 min |
| | | Power & Fault port to other isolated ports | 1500 VAC 1 min |
| Temperature | EN 60068-2-1<br>EN 60068-2-2 | Operating | -40 to +70°C |
| | | Storage & Transport | -40 to +85°C |
| Humidity | EN 60068-2-30 | Operating | 5 to 95% relative humidity |
| | | Storage & Transport | 5 to 95% relative humidity |
| Altitude | | Operating | 2000 m / 70 kPa |
| Reliability prediction (MTBF) | MIL-C217F2, GB | Operating | 150 years @ 20 °C<br>147 years @ 40 °C<br>135 years @ 60 °C |
| Service life | | Operating | 10 years |
| Vibration, random simulated long life | IEC 60068-2-64, Cat. 1 class B (EN 61373) | Not Operating | Vertical: 7.9 $m/s^2$<br>Transverse: 7.9 $m/s^2$<br>Longitudinal: 7.9 $m/s^2$<br>3 x 5 h |
| Vibration, random functional | IEC 60068-2-64, Cat. 1 class B (EN 61373) | Operating | Vertical: 1.0 $m/s^2$<br>Transverse: 1.0 $m/s^2$<br>Longitudinal: 1.0 $m/s^2$<br>3 x 10 min |
| Shock, half sine pulses | IEC 60068-2-27, Cat. 1 class B (EN 61373) | Operating | Vertical: 50 $m/s^2$<br>Transverse: 50 $m/s^2$<br>Longitudinal: 50 $m/s^2$<br>30 ms, 3 x 6 shocks |

| Phenomena | Test | Description | Test levels |
|---|---|---|---|
| Shock, sawtooth | IEC 60068-2-27, Cat. 1 class B (IEEE1478-2001) | Operating | Vertical: 100 $m/s^2$<br>Transverse: 100 $m/s^2$<br>Longitudinal: 100 $m/s^2$<br>11 ms, 3 x 6 shocks |
| Enclosure | UL 94 | Nickel coated zinc | Flammability class V-1 |
| Dimension W x H x D | | | 175 x 100 x 53,4 mm |
| Weight | | | 0.9 kg |
| Degree of protection | IEC 529 | Enclosure | IP 65 when all ports are protected/ connected else IP 40 |
| Cooling | | | Convection |
| Mounting | | | DIN Rail or wall mounted |

# Description

Viper-008 is a unmanaged switch developed for rail and industrial applications. To meet the environmental requirements from rail and harsh industrial applications the switch has rugged M12 Ethernet connectors and full metal housing. The IP65 sealed metal case make it robust and allows for the surrounding air temperature to be between -40 to +70°C. There are no sensitive or fragile components, hardening the product against shock and vibration making these units suitable for rolling stock usage. The power supply operates over a wide input range from 24 to 110 VDC.

# Interface Specifications

| **Power and fault relay port PWR** | |
|---|---|
| Rated voltage | 24 to 110 VDC |
| Operating voltage | 16.8 to 143 VDC (14.4 to 154 VDC for 100 ms) |
| Rated current | 110 mA @ 24 VDC<br>33 mA @ 110 VDC |
| Rated frequency | DC |
| Inrush current, $I^2t$ | Max 0.02 $A^2s$ @ 24 - 110 VDC |
| Polarity | Reverse polarity protected |
| Startup current* | 300 mA @ 16.8 VDC |
| Redundant power input | No |
| Isolation to | Connections X1 - X8 and to ground, 1500 VAC.<br>Fault relay belongs to the same isolation group as the power supply lines (fault relay signals are also contained within PWR). |
| Connection | 4 pin male M12 connector with A-code |
| Connector size | M12, recommended cable area 0.5 $mm^2$ recommended (minimum 0.25 $mm^2$), cable dimensions depend on choice of M12 connector |
| Shielded cable | Not required, twisted pair is recommended |
| Fault relay resistance | < 10 Ω |

* If external power supply is used it must meet specified startup current.

| | Position | Direction | Description |
|---|---|---|---|
| 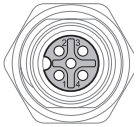 | 1 | U+ | Positive supply voltage |
| | 2 | Out | Alarm relay (status) + |
| | 3 | 0 V | Negative supply voltage |
| M12 A-Coded Power Connector | 4 | Out | Alarm relay (status) - |
| | Housing | Shield | Chassis of product (ground) |

## Fault Contact

The Viper switch is equipped with a potential free normally closed fault contact. The fault contact is a solid state component (relay) that requires power to work and it is transient protected. Additionally, the fault contact is opened when any of the following conditions is met:

- No voltage on the power supply pin, a voltage level outside the legal voltage range or current limitation on the voltage source is applied on the power input.

Description of how connection to the fault contact could be done is shown below. The relay is closed when the unit is OK and open at failure. The relay is of semiconductor type (no moving parts). It is specified for max current 250 mA continuous, 500 mA peak (10 ms), operational voltage up to 110 V, protected by a 150 VDC-varistor, ON-resistance less than 10 Ohm, and leakage current max 1 µA.

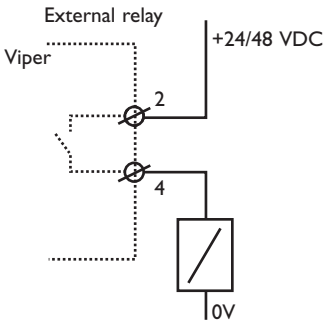


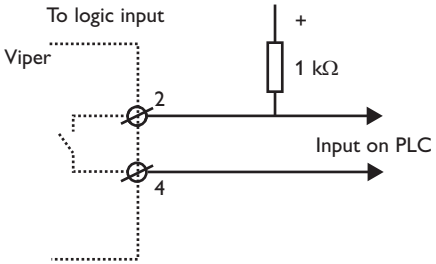


## Service Port

The service port should not be used by non other than the Westermo Technical Support team. Do not connect any device or cable to the Service Port.

| **Ethernet TX port X1 to X8** | |
|---|---|
| Electrical specification | IEEE std 802.3. |
| Data rate | 10 Mbit/s or 100 Mbit/s |
| Duplex | Full or half |
| Circuit type | TNV-1 |
| Transmission range | 100 m |
| Isolation to | Other Ethernet ports, 500 VAC<br>PWR, 1500 VAC |
| Galvanic connection to | None, except for shielded contact to housing |
| Connection | 4-pole M12 female with D-code |
| Shielded cable | Not required, twisted pair is recommended |
| Conductive chassis | Yes |
| Number of ports | 8 Ethernet (X1-X8) |

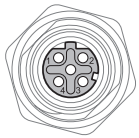

| Position | Direction | Description |
|---|---|---|
| 1 | Out | Transmit Data + |
| 2 | In | Receive Data + |
| 3 | Out | Transmit Data - |
| 4 | In | Receive Data - |
| Housing | Shield | Chassis of product (ground) |

Auto MDI/MDI-X mode is supported. The table shows signals in MDI mode.

# Location of Interface Ports, LEDs

## LED indicators

| LED | Status | Description |
|---|---|---|
| PWR | GREEN | Unit indicates no fault |
| | RED | Unit indicated fault |
| X1 to X8 | OFF | No Link |
| | GREEN | Link is up |
| | GREEN FLASH | Data is transmitted |

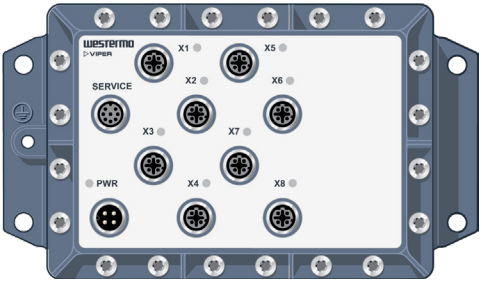

## Mounting, DIN-rail

This unit can be mounted on 35 mm DIN-rail, which is horizontally mounted inside an apparatus cabinet or similar. Snap on mounting, see figure.

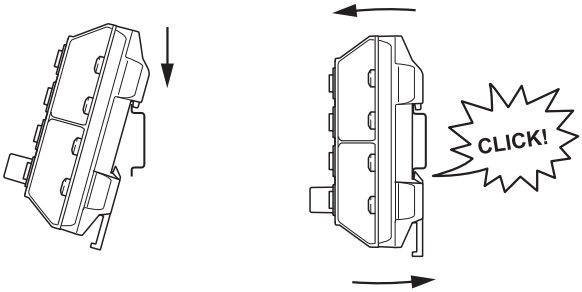


## Removal

Press down the support at the back of the unit using a screwdriver. See figure.

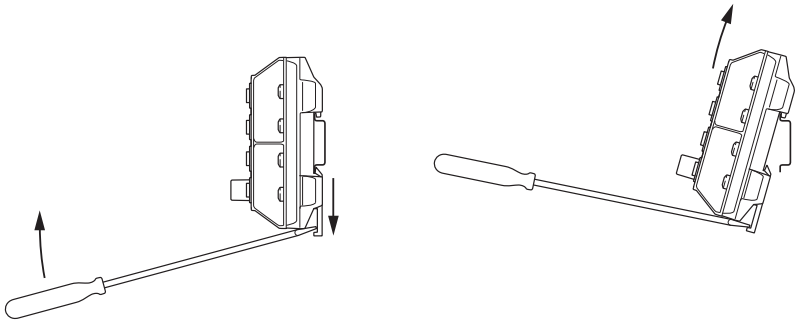

## Wall Mounting

There are four 6 mm bore holes intended for mounting the unit. The unit can be mounted vertical or horizontal. Use four M6 screws with 12 mm washer on a flat and stable surface.

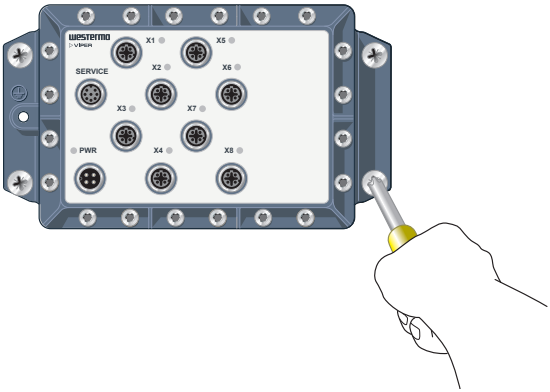


## Removal

Disconnect all cables and unscrew the unit from the wall.

## Cooling

This unit uses convection cooling. Avoid obstructing the airflow around the unit. Spacing is recommended for the use of unit in full operating temperature range and service life.

## Removal of Protective Caps

Protective caps shall only be removed using a Torx T40 bit or a flat-blade screwdriver (1.2 × 8 mm). Carefully insert the tool into the slot of the protective cap and turn it counter-clockwise until the cap can be removed.

**NOTE**

Do not use any other tools, as they may damage the protective cap or the connector.

# Dimensions

Measurements are stated in millimeters.

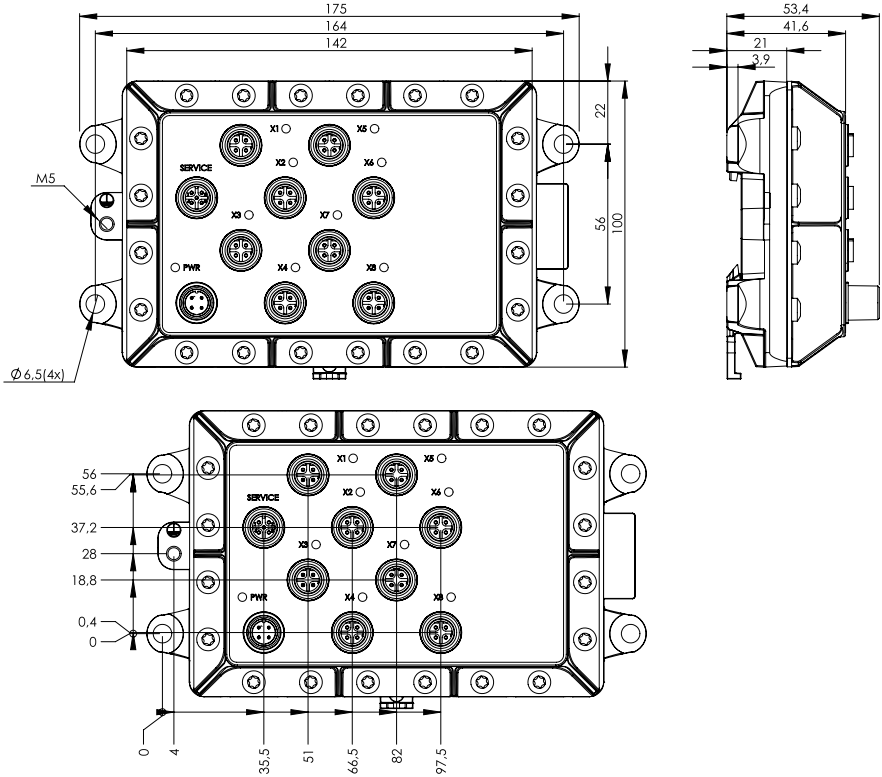

Westermo • Metallverksgatan 6, SE-721 30 Västerås, Sweden
Tel +46 16 42 80 00  Fax +46 16 42 80 01
E-mail: info@westermo.com
www.westermo.com

**REV. N 6641-2211** 2026-10 Westermo Network Technologies AB, Sweden