www.westermo.com

Viper-012

Unmanaged EN 50155 Switch

General Information

Legal Information

The contents of this document are provided “as is”. Except as required by applicable law, no warranties of any kind are made in relation to the accuracy and reliability or contents of this document, either expressed or implied, including but not limited to the implied warranties of merchantability and fitness for a particular purpose. Westermo reserves the right to revise this document or withdraw it at any time without prior notice.

Under no circumstances shall Westermo be responsible for any loss of data or income or any special, incidental, and consequential or indirect damages howsoever caused.

More information about Westermo can be found at **www.westermo.com**

Safety and Regulations

Warning signs are provided to prevent personal injury and/or damages to the product.

The following levels are used:

Level of warning	Description	Consequence personal injury	Consequence material damage
WARNING	Indicates a potentially hazardous situation	Possible death or major injury	Major damage to the product
CAUTION	Indicates a potentially hazardous situation	Minor or moderate injury	Moderate damage to the product
NOTICE	Provides information in order to avoid misuse of the product, confusion or misunderstanding	No personal injury	Minor damage to the product
NOTE	Used for highlighting general, but important information	No personal injury	Minor damage to the product

Before Installation:

Read this manual completely and gather all information on the product. Make sure that you understand it fully. Check that your application does not exceed the safe operating specifications for this product.

SAFETY DURING INSTALLATION

The product must be installed by qualified service personnel and built in to an apparatus cabinet or similar, where access is restricted to service personnel only.

During installation, ensure a protective earthing conductor is first connected to the protective earthing terminal (only valid for metallic housings). Westermo recommends a cross-sectional area of at least 4 mm2.

Upon removal of the product, ensure that the protective earthing conductor is disconnected last.

HAZARDOUS VOLTAGE

Do not open an energized product. Hazardous voltage may occur when connected to a power supply.

PROTECTIVE FUSE

The power supply wiring must be sufficiently fused.

It must be possible to disconnect manually from the power supply. Ensure compliance to national installation regulations.

This product has no internal fuse and should be connected via an external fuse for protection.

REDUCE THE RISK OF FIRE

To reduce the risk of fire, use only telecommunication line cords with a cable diameter of AWG 26 or larger. Regarding power cable dimensions, see Interface Specifications.

HOT SURFACE

Be aware that the surface of this product may become hot. When it is operated at high temperatures, the external surface may exceed Touch Temperature Limit according to the product's relevant electrical safety standard.

ELECTROSTATIC DISCHARGE (ESD)

Prevent electrostatic discharge damages to internal electronic parts by discharging your body to a grounding point (e.g. use a wrist strap).

Care Recommendations

Follow the care recommendations below to maintain full operation of product and to fulfill the warranty obligations:

- Do not drop, knock or shake the product. Rough handling above the specification may cause damage to internal circuit boards.
- Use a dry or slightly water-damp cloth to clean the product. Do not use harsh chemicals, cleaning solvents or strong detergents.
- Do not paint the product. Paint can clog the product and prevent proper operation.

If the product is used in a manner not according to specification, the protection provided by the equipment may be impaired.

If the product is not working properly, contact the place of purchase, nearest Westermo distributor office or Westermo technical support.

Product Disposal

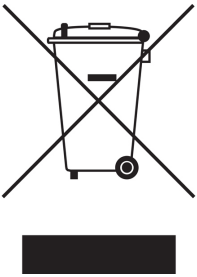

This symbol means that the product shall not be treated as unsorted municipal waste when disposing of it. It needs to be handed over to an applicable collection point for recycling electrical and electronic equipment.

By ensuring this product is disposed of correctly, you will help to reduce hazardous substances and prevent potential negative consequences to both environment and human health, which could be caused by inappropriate disposal.

Declaration of Conformity

Hereby, Westermo declares that this product is in compliance with applicable EU directives and UK legislations. The full declaration of conformity and other detailed information is available at **www.westermo.com/support/product-support**.

Agency Approvals and Standards Compliance

Type	Approval / Compliance
EMC	EN 61000-6-1, Immunity residential environments
	EN 61000-6-2, Immunity industrialokokvironments
	EN 61000-6-3, Emission residential environments
	EN 61000-6-4, Emission industrial environments
	EN 50121-3-2, Railway applications – Rolling stock – apparatus
	EN 50121-4/IEC 62236-4, Railway signaling and telecommunications apparatus
Environmental	EN 61373, Railway applications – Rolling stock equipment. Shock and vibration tests
	IEEE 1478, Environmental conditions for transit rail car electronic equipment
	EN 50124-1, Railway applications – Insulation coordination
	EN 50155, Railway applications – Electronic equipment used on rolling stock
	IEC 60068-2-27, (shock 100g, 6 ms, halfsine)
	EN 45545-2, Fire safety standard

FCC Part 15.105 Notice:

This equipment has been tested and found to comply with the limits for a Class B digital device, pursuant to Part 15 of the FCC Rules. These limits are designed to provide reasonable protection against harmful interference in a residential installation. This equipment generates, uses and can radiate radio frequency energy and, if not installed and used in accordance with the instructions, may cause harmful interference to radio communications. However, there is no guarantee that interference will not occur in a particular installation. If this equipment does cause harmful interference to radio or television reception, which can be determined by turning the equipment off and on, the user is encouraged to try to correct the interference by one or more of the following measures:

- Reorient or relocate the receiving antenna
- Increase the separation between the equipment and receiver
- Connect the equipment into an outlet on a circuit different from that to which the receiver is connected
- Consult the dealer or an experienced radio/TV technician for help.

Type Tests and Environmental Conditions

Environmental phenomena	Basic standard	Description	Test levels
ESD	EN 61000-4-2	Enclosure	Contact: ±6 kV Air: ±8 kV
Fast transients	EN 61000-4-4	Power port	±5 kV
		Signal ports	±2 kV
		Earth port	±1 kV
Surge	EN 61000-4-5	Power port	L-E: ±2 kV, 12Ω, 9 µF, 1.2/50 µs L-L: ±1 kV, 2Ω, 18 µF, 1.2/50 µs L-E: ±2 kV, 42Ω, 0.5 µF, 1.2/50 µs L-L: ±2 kV, 42Ω, 0.5 µF, 1.2/50 µs L-E: ±8.4 kV, 100Ω, 0.05/0.1 µs L-L: ±8.4 kV, 100Ω, 0.05/0.1 µs
		Ethernet ports	L-E: ±2 kV, 2 Ω
Power frequency magnetic field	EN 61000-4-8	Enclosure	300 A/m; 0, 16.7, 50, 60 Hz
Pulsed magnetic field	EN 61000-4-9	Enclosure	300 A/m
Radiated RF immunity	EN 61000-4-3	Enclosure	20 V/m @ (80 MHz – 2.7 GHz) 1 kHz sine, 80% AM 10 V/m @ (2.7 – 6 GHz) 1 kHz sine, 80% AM
Conducted RF immunity	EN 61000-4-6	Power port	10 V, 80% AM, 1 kHz; (0.15 – 80) MHz
		Ethernet ports	10 V, 80% AM, 1 kHz; (0.15 – 80) MHz
		Earth port	10 V, 80% AM, 1 kHz; (0.15 – 80) MHz
Radiated RF emission	CISPR 16-2-3	Enclosure	Class B (30 – 6000 GHz)
	ANSI C63,4 (FCC Part 15)		Class B (30 – 6000 GHz)
Conducted RF emission	CISPR 16-2-1	Power port	Class B
		Ethernet ports	Class B
Dielectric strength	EN 60950-1	Power port to all other ports	1.5 kV ACrms, 50 Hz, 1 min
		Fast Ethernet ports to all other ports	1.5 kVACrms, 50 Hz, 1 min
Environmental			
Temperatures	EN 60068-2-1 EN 60068-2-2	Operating	–40 to +70°C (–40 to +158°F)*
		Storage and transport	–50 to +85°C (–58 to +185°F)
Humidity	EN 60068-2-30	Operating	5 to 95% relative humidity
		Storage and transport	5 to 95% relative humidity
Altitude		Operating	2 000 m / 70 kPa
Service life		Operating	15 years
MTBF		636,000 hours	MIL-C217F2, GB, 25°C (+77°F)
Vibration	IEC 60068-2-6 (sine)	Non operating long life simulation	7.9 m/s^2 (RMS) 5 – 150 Hz
	IEC 60068-2-64 (random)	Operating	1 m/s^2 (RMS) 5 – 150 Hz
Shock	IEC 60068-2-27	Operating	10 g, 30 ms, 20 g, 11 ms, 100 g, 6 ms
Bump	IEC 60068-2-27	Operating	10 g, 11 ms
Enclosure		Zinc	Fire enclosure
Dimension W x H x D With connectors			See "Dimensions" chapter for details
Weight			1.3 kg
Degree of protection	EN 60529	Enclosure	IP67**
Cooling			Convection

* Refer to “Safety” section

** Provided all connectors are connected with IP67 cabling or fitted with protective caps (delivered with the unit), tightened to the specified torque

Description

Designed for harsh industrial environments

The Viper-012 is a unmanaged rugged Ethernet switch designed for applications with severe operating conditions and extreme environments.

With an ultra robust design, sealed to IP67 and vibration resistant to and exceeding on-board rail standards this unit is ideal for situations where mechanical stress, moisture, condensation, dirt or continuous vibrations could adversely affect the function of standard Ethernet switches. Fully approved for onboard rolling stock, this unit can be deployed in e.g. trains, trams, busses, mining trucks, army vehicles and drilling rigs.

Product model

3641-0540 Viper-012 unmanaged switch.

Interface Specifications

DC, Power port	
Rated voltage	24 to 110 VDC
Operating voltage	16.8 to 143 VDC (14.4 to 154 VDC for 100 ms)
Rated current	Viper-x12: Max 350 mA @ 24 V, max 90 mA @ 110 V Viper-x12-T3G: Max 550 mA @ 24 V, max 120 mA @ 110 V
Rated frequency	DC
Inrush current, I^2t	1 mA^2s @ 24 V and 6 mA^2s @ 110 V
Startup current*	535 mA @ 24 V 145 mA @ 110 V
Polarity	Reverse polarity protected
Redundant power input	Yes
Isolation to	1500 VAC rms to all other
Connection	4 pin male M12 A-coded connector, use Westermo cable 3146-1106 for 1.5 m 3146-1107 for 5 m
Connector size	M12, recommended cable area 0.5 mm^2 recommended (minimum 0.25 mm^2), cable dimensions depend on choice of M12 connector

* External supply current capability for proper start-up

X1-X12 Ethernet ports	
Electrical specification	IEEE std 802.3. 2005 Edition
Data rate	10 Mbit/s, 100 Mbit/s, manual or auto
Duplex	Full or half, manual or auto
Circuit type	Viper-x12: X1-X12: TNV-1 Viper-x12-T3G: X1-X3, X5-X7, X9-X11: TNV-1 X4, X8, X12: SELV
Transmission range	Up to 150 m with CAT5e cable or better
Isolation to	Viper-x12: 1500 VAC rms to all other ports Viper-x12-T3G: X1-X3, X5-X7, X9-X11: 1500 VAC rms to other ports X4, X8, X12: 500 VAC rms to other ports
Connection	4-pin M12 D-code, auto MDI/MDI-X, use e g Westermo cable 3146-1100 M12-M12 – 1 m 3146-1101 M12-M12 – 5 m 3146-1103 RJ45-M12 – 1 m 3146-1104 RJ45-M12 – 5 m
Shielded cable	Not required, but recommended in severe electromagnetic environments
Conductive housing	Yes
Number of ports	12

Location of Interface Ports and LED

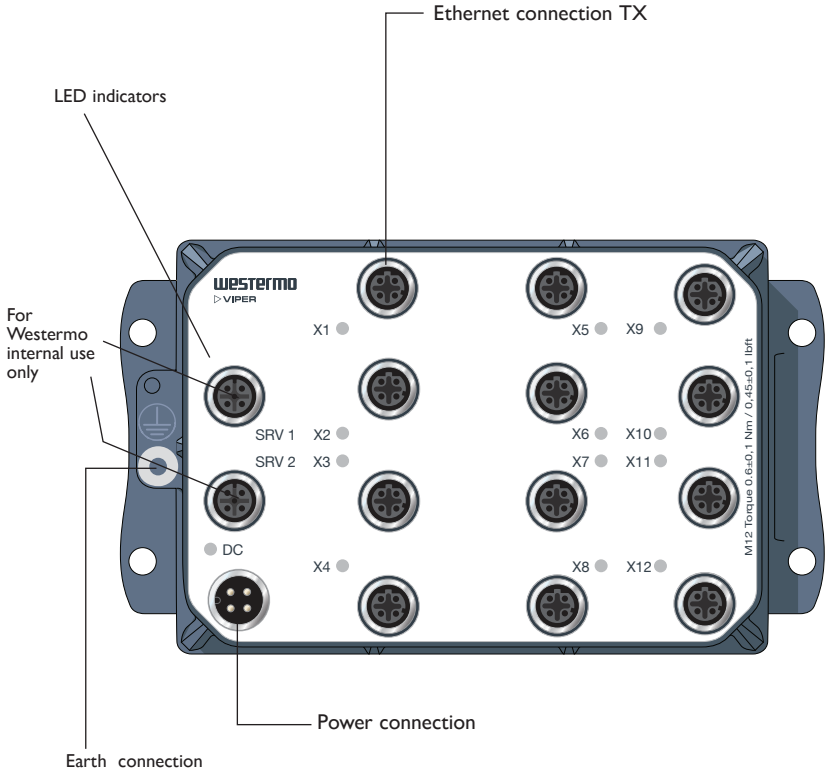

Power Connector Pin-out

Pin number	Signal
No 1	+DC1
No 2	+DC2
No 3	-COM
No 4	-COM

LED Indicators

LED	Status	Description
DC	OFF	Unit has no power.
	GREEN	Power OK on DC1 and DC2.
	RED	Power failure on DC1 or DC2.
X1 to X12	OFF	No Link.
	GREEN	Link established.
	GREEN FLASH	Data traffic indication.
	YELLOW	Port alarm and no link.

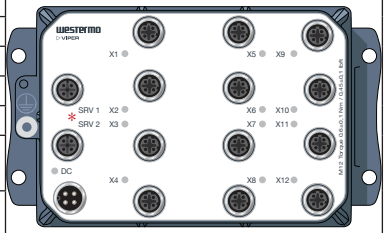

* SRV 1 & SRV 2 only for internal use by Westermo staff

Wall Mounting

There are four 6 mm bore holes intended for mounting the unit. The unit can be mounted vertical or horizontal. Use four M5 screws with 12 mm washer on a flat and stable surface.

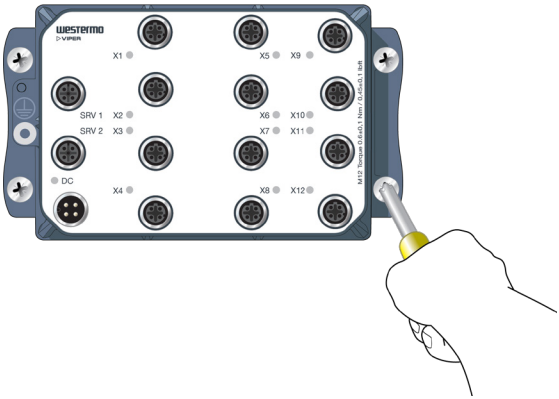

Connection of cables

Recommended tightening torque for the M12 connectors: 0.6 Nm

Note that unused connectors must be covered by a protective cap (delivered with the unit), tightened to the specified torque, in order to fulfill the specified ingress protection code.

Removal

Disconnect all cables and unscrew the unit from the wall.
Time For Replacement < 15 minutes

Cooling

This unit relies on convection cooling. Make sure that it is installed so that the ambient temperature is within the specified temperature range, e.g. by avoiding obstruction of the airflow around the unit.

Removal of Protective Caps

Protective caps shall only be removed using a Torx T40 bit or a flat-blade screwdriver (1.2 × 8 mm). Carefully insert the tool into the slot of the protective cap and turn it counter-clockwise until the cap can be removed.

NOTE

Do not use any other tools, as they may damage the protective cap or the connector.

Dimensions

Measurements are stated in millimeters.

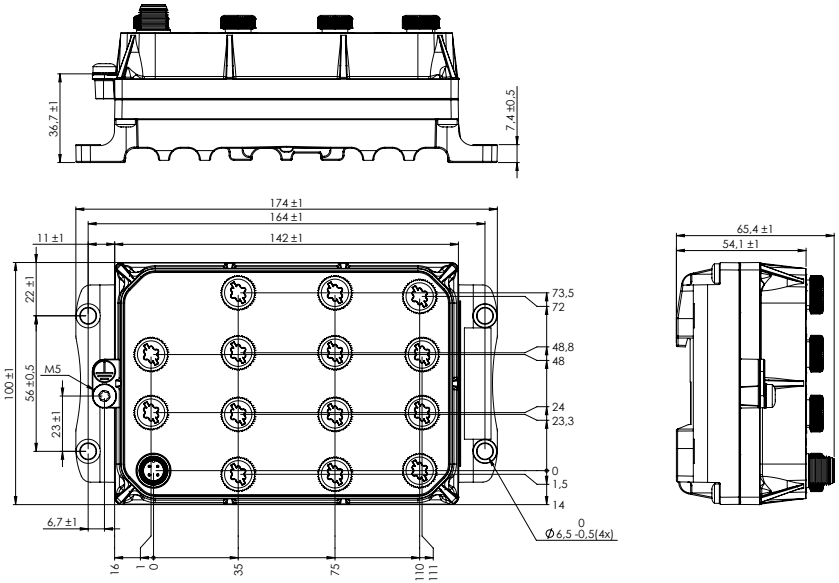

Westermo • Metallverksgatan 6, SE-721 30 Västerås, Sweden
Tel +46 16 42 80 00 Fax +46 16 42 80 01
E-mail: info@westermo.com
www.westermo.com

REV. G 6641-22410 2026-10 Westermo Network Technologies AB, Sweden