www.westermo.com

Viper 12 PoE Series

12-port Ethernet M12 Switch
with Power over Ethernet

Software Tools

Related software tools are available in the folder software tools under technical support on the Westermo website.

Legal Information

The contents of this document are provided “as is”. Except as required by applicable law, no warranties of any kind, either express or implied, including, but not limited to, the implied warranties of merchantability and fitness for a particular purpose, are made in relation to the accuracy and reliability or contents of this document. Westermo reserves the right to revise this document or withdraw it at any time without prior notice.

Under no circumstances shall Westermo be responsible for any loss of data or income or any special, incidental, and consequential or indirect damages howsoever caused.

More information about Westermo can be found at the following Internet address:

http://www.westermo.com

Safety

Before installation:
Read this manual completely and gather all information on the unit. Make sure that you understand it fully. Check that your application does not exceed the safe operating specifications for this unit.

This unit should only be installed by qualified personnel.

This unit should be built-in to an apparatus cabinet, or similar, where access is restricted to service personnel only. The power supply wiring must be sufficiently fused, and if necessary it must be possible to disconnect manually from all power supply. Ensure compliance to national installation regulations. This unit relies on convection heating. Make sure that it is installed so that the ambient temperature is within the specified temperature range, e.g. by avoiding obstruction of the airflow around the unit. Also check chapter CEN/TS 45545-2 mounting notes.

Before mounting, using or removing this unit:
Prevent access to hazardous voltage by disconnecting the unit from all power supply.

WARNING
Do not open connected unit. Hazardous voltage may occur within this unit when connected to power supply.

Before powering-up, a protective earthing conductor must be connected to the protective earthing terminal and have a cross-sectional area of at least 1.5 mm². Note that this unit can be connected to two different power sources.

When this unit is operated at an ambient temperature above +60°C (+140°F), the External Surface of Equipment may exceed Touch Temperature Limit according to EN/IEC/UL 60950-1. To reduce the risk of fire, use only No. 26 AWG or larger telecommunication line cord.

Care Recommendations

Follow the care recommendations below to maintain full operation of unit and to fulfill the warranty obligations:

- Do not attempt to dissassemble the unit. There are not any user serviceable parts inside.
- Do not drop, knock or shake the unit. Rough handling above the specification may cause damage to internal circuit boards.
- Do not use harsh chemicals, cleaning solvents or strong detergents to clean the unit.
- Do not expose the unit to any kind of liquid (water, beverages, paint etc), unless all connectors are connected or fitted with protective caps (delivered with the unit), tightened to the specified torque. Connected cables must have the appropriate ingress protection code.
- Do not use or store the unit in dusty or dirty areas, unless all connectors and the ventilation membrane are sufficiently protected.
- Do not cover or bring mechanical force to the ventilation membrane on the back of the unit.

If the unit is not working properly, contact the place of purchase, nearest Westermo distributor office or Westermo Tech support.

Maintenance

No maintenance is required, as long as the unit is used as intended within the specified conditions.

Agency Approvals and Standards Compliance

Type	Approval / Compliance
EMC	EN 61000-6-1, Immunity residential environments
	EN 61000-6-2, Immunity industrial environments
	EN 61000-6-4, Emission industrial environments
	EN 50121-3-2, Railway applications – Rolling stock – apparatus
	EN 50121-4 / IEC 62236-4, Railway signaling and telecommunications apparatus
Safety	EN 60950-1, IT equipment
Environmental	EN 61373 Railway applications – Rolling stock equipment. Shock and vibration tests
	IEEE 1478 Environmental conditions for transit rail car electronic equipment
	EN 50124-1 Railway applications – Insulation coordination
	EN 50155 Railway applications – Electronic equipment used on rolling stock
	IEC 60068-2-27, (shock 100g, 6 ms, halfsine)
	CEN/TS 45545-2 Fire safety standard

FCC Part 15.105 Notice:

This equipment has been tested and found to comply with the limits for a Class A digital device, pursuant to Part 15 of the FCC Rules. These limits are designed to provide reasonable protection against harmful interference when the equipment is operated in a commercial environment.
This equipment generates, uses, and can radiate radio frequency energy and, if not installed and used in accordance with the instruction manual, may cause harmful interference to radio communications. Operation of this equipment in a residential area is likely to cause harmful interference in which case the user will be required to correct the interference at his own expense.

Westermo Teleindustri AB

Declaration of Conformity

The manufacturer Westermo Teleindustri AB
SE-640 40 Stora Sundby, Sweden

Herewith declares that the product(s)

Type of product	Model	Art no
12-port managed Gig Ethernet M12 PoE Switch	Viper-112-T3G-P8, Viper-212-T3G-P8	3641-0570, 3641-0595

is in conformity with the following EU directive(s).

No	Short name
2014/30/EU	Electromagnetic Compatibility (EMC)
2014/35/EU	Low Voltage Directive (LVD)
2011/65/EU	Restriction of the use of certain hazardous substances in electrical and electronic equipment (RoHS)

References of standards applied for this EU declaration of conformity.

No	Title	Issue
EN 50121-3-2	Railway applications – Electromagnetic compatibility – Rolling stock - Apparatus	2006
EN 50121-4	Railway applications – Electromagnetic compatibility – Emission and immunity of the signaling and telecommunications apparatus	2006
EN 61000-6-1	Electromagnetic compatibility - Generic standards - Immunity for residential, commercial and light-industrial environments	2007
EN 61000-6-2	Electromagnetic compatibility - Generic standards - Immunity for industrial environments	2005
EN 61000-6-4	Electromagnetic compatibility - Generic standards - Emission standard for industrial environments	2007 +A1:2011
EN 60950-1	Information technology equipment – Safety – General requirements	2006 +A11:2009 +A1:2010 +A12:2011
EN 50581	Technical documentation for the assessment of electrical and electronic products with respect to the restriction of hazardous substances	2012

The last two digits of the year in which the CE marking was affixed: 16

Signature

Pierre Öberg
Technical Manager
22nd March 2016

Postadress/Postal address	Tel.	Telefax	Postgiro	Bankgiro	Org.nr/ Corp. identity number	Registered office
S-640 40 Stora Sundby Sweden	016-428000 Int+46 16428000	016-428001 Int+46 16428001	52 72 79-4	5671-5550	556361-2604	Eskilstuna

Westermo Teleindustri AB

Declaration of Conformity

The manufacturer Westermo Teleindustri AB
SE-640 40 Stora Sundby, Sweden

Herewith declares that the product(s)

Type of product	Model	Art no
12-port managed Ethernet M12 PoE Switch	Viper-112-P8, Viper-212-P8	3641-0580, -0590

is in conformity with the following EU directive(s).

No	Short name
2014/30/EU	Electromagnetic Compatibility (EMC)
2014/35/EU	Low Voltage Directive (LVD)
2011/65/EU	Restriction of the use of certain hazardous substances in electrical and electronic equipment (RoHS)

References of standards applied for this EU declaration of conformity.

No	Title	Issue
EN 50121-3-2	Railway applications – Electromagnetic compatibility – Rolling stock - Apparatus	2015
EN 50121-4	Railway applications – Electromagnetic compatibility – Emission and immunity of the signaling and telecommunications apparatus	2015
EN 61000-6-1	Electromagnetic compatibility - Generic standards - Immunity for residential, commercial and light-industrial environments	2007
EN 61000-6-2	Electromagnetic compatibility - Generic standards - Immunity for industrial environments	2005
EN 61000-6-4	Electromagnetic compatibility - Generic standards - Emission standard for industrial environments	2007 +A1:2011
EN 60950-1	Information technology equipment – Safety – General requirements	2006 +A11:2009 +A1:2010 +A12:2011
EN 50581	Technical documentation for the assessment of electrical and electronic products with respect to the restriction of hazardous substances	2012

The last two digits of the year in which the CE marking was affixed: 16

Signature

Pierre Öberg
Technical Manager
22nd March 2016

Postadress/Postal address	Tel.	Telefax	Postgiro	Bankgiro	Org.nr/ Corp. identity number	Registered office
S-640 40 Stora Sundby Sweden	016-428000 Int+46 16428000	016-428001 Int+46 16428001	52 72 79-4	5671-5550	556361-2604	Eskilstuna

Type Tests and Environmental Conditions

Environmental phenomena	Basic standard	Description	Test levels
ESD	EN 61000-4-2	Enclosure	Contact: ±6 kV Air: ±8 kV
Fast transients	EN 61000-4-4	Power port	±4 kV
		Ethernet ports	±2 kV
		Earth port	±1 kV
Surge	EN 61000-4-5	Power port	L-E: ±2 kV, 12Ω, 9 µF, 1.2/50 µs L-L: ±1 kV, 2Ω, 18 µF, 1.2/50 µs L-E: ±2 kV, 42Ω, 0.5 µF, 1.2/50 µs L-L: ±2 kV, 42Ω, 0.5 µF, 1.2/50 µs L-E: ±8.4 kV, 100Ω, 0.05/0.1 µs L-L: ±8.4 kV, 100Ω, 0.05/0.1 µs
		Ethernet ports	L-E: ±2 kV, 2 Ω
Power frequency magnetic field	EN 61000-4-8	Enclosure	300 A/m; 0, 16.7, 50, 60 Hz
Pulsed magnetic field	EN 61000-4-9	Enclosure	300 A/m
Radiated RF immunity	EN 61000-4-3	Enclosure	20 V/m @ (80 MHz – 2.7 GHz) 10 V/m @ (2.7 Ghz – 6 GHz)* 1 kHz sine, 80% AM
Conducted RF immunity	EN 61000-4-6	Power port	10 V, 80% AM, 1 kHz; (0.15 – 80) MHz
		Ethernet ports	10 V, 80% AM, 1 kHz; (0.15 – 80) MHz
		Earth port	10 V, 80% AM, 1 kHz; (0.15 – 80) MHz
Radiated RF emission	CISPR 16-2-3	Enclosure	Class A (30 – 6000 GHz)
	ANSI C63.4 (FCC Part 15)		Class A (30 – 6000 GHz)
Conducted RF emission	CISPR 16-2-1	Power port	Class A
		Ethernet ports	Class B
Dielectric strength	EN 60950-1	Power port to all other ports	1.5 kV ACrms, 50 Hz, 1 min
		Fast Ethernet ports to all other ports (not between PoE ports)	1.5 kV ACrms, 50 Hz, 1 min
		Gigabit Ethernet ports to all other ports	500 V ACrms, 50 Hz, 1 min
Environmental			
Temperatures	EN 60068-2-1	Operating	–40 to +70°C (–40 to +158°F)**
	EN 60068-2-2	Storage and transport	–50 to +85°C (–58 to +185°F)
Humidity	EN 60068-2-30	Operating	5 to 95 % relative humidity
		Storage and transport	5 to 95 % relative humidity
Altitude		Operating	2 000 m / 70 kPa
Service life		Operating	15 years @ 25°C (+77°F)
MTBF		Viper-x12-P8: 448 000 h	MIL-C217F2, GB, 25°C (+77°F)
		Viper-x12-P8-T3G: 403 000 h	
Vibration	IEC 60068-2-64 (random)	Operating	5 – 20 Hz, 0.0405 g^2/Hz 20 – 150 Hz, –6 dB / oct 5h, 1.14 grms
Shock	IEC 60068-2-27	Operating	10 g, 30 ms, 20 g, 11 ms, 100 g, 6 ms
Enclosure	EN 60950-1	Zinc (front) Aluminum (rear)	Fire enclosure
Dimension W x H x D With connectors			See "Dimensions" chapter for details
Weight			1.7 kg
Degree of protection	EN 60529	Enclosure	IP67***
Cooling			Convection

* Only Viper-x12-P8 according to EN 50121-3: 2015
** Refer to “Safety” section
*** Provided all connectors are connected with IP67 cabling or fitted with protective caps (delivered with the unit), tightened to the specified torque

Description

Designed for harsh industrial environments

The Viper-12-PoE series is a series of managed rugged Ethernet switches with Power over Ethernet, designed for applications with severe operating conditions and extreme environments.

With an ultra robust design, sealed to IP67 and vibration resistant to and exceeding on-board rail standards these units are ideal for situations where mechanical stress, moisture, condensation, dirt or continuous vibrations could adversely affect the function of standard Ethernet switches. Fully approved for onboard rolling stock, these units can be deployed in e.g. trains, trams, busses, mining trucks, army vehicles and drilling rigs.

Features for complete network management

Our unique FRNT technology is the fastest and most robust protocol on the market to re-configure a large network in the event of any link or hardware failure. The Viper-12-PoE series also supports STP/RSTP in case of need for standard protocol. IGMPv2/v3 with stop filter and the unique Westermo protocol 'Fast Reconnect' allows a video stream to reconfigure very fast. Advanced functionality for VLANs with support for up to 64 virtual networks, combined with real-time properties is implemented in the switch in order to achieve determinism for real time critical applications.

Made easy and secure configuration

You can safely access your switch from anywhere in the network, or directly to the product via a console port. The HTTPS secured web configuration interface has been designed 'Made Easy', setting up a redundant ring or a VLAN is just a few clicks away. For more advanced configuration, you will find an SSH encrypted industry standard CLI which allows extremely detailed settings. For safe handling and MIB readout the switch is also equipped with SNMPv3.

Product models

There are four different models of the Viper-12-PoE series:
3641-0580 Viper-112-P8 managed switch with Layer 2 SW functions.
3641-0590 Viper-212-P8 managed switch with Layer 3 SW functions.
3641-0570 Viper-112-T3G-P8 managed switch with Layer 2 SW functions and three GigE ports.
3641-0595 Viper-212-T3G-P8 managed switch with Layer 3 SW functions and three GigE ports.

Interface Specifications

DC, Power port	
Rated voltage	48 to 110 VDC
Operating voltage	33.6 to 143 VDC (28.8 to 154 VDC for 100 ms)
Rated current	Viper-x12-P8: Max 1.7 A @ 48V Max 0.8 A @ 110 V Viper-x12-T3G-P8: Max 1.8 A @ 48V Max. 0.8 A @ 110 V
Rated frequency	DC
Inrush current, I^2t	21 mA^2s @ 48 V 68 mA^2s @ 110 V
Startup current*	Max 1.8 A @ 48 V Max 0.8 A @ 110 V
Polarity	Reverse polarity protected
Redundant power input	Yes
Isolation to	1500 VAC rms to all other
Connection	4 pin male M12 A-coded connector, use Westermo cable 3146-1106 for 1.5 m 3146-1107 for 5 m
Connector size	M12, recommended cable area 0.5 mm^2 recommended (minimum 0.25 mm^2), cable dimensions depend on choice of M12 connector

* External supply current capability for proper start-up

X1-X12 Ethernet ports*	
Electrical specification	IEEE std 802.3. 2005 Edition
Data rate	10 Mbit/s, 100 Mbit/s, manual or auto
Duplex	Full or half, manual or auto
Circuit type	Viper-x12-P8: X1-X12: TNV-1 Viper-x12-T3G-P8: X1-X3, X5-X7, X9-X11: TNV-1 X4, X8, X12: SELV
Transmission range	Up to 150 m with CAT5e cable or better (non PoE ports only)
Isolation to	Other Ethernet ports, 1500 VAC rms (not between PoE ports) USB and CON, 1500 VAC rms DC, 1500 VAC rms
Connection	4-pin M12 D-code, auto MDI/MDI-X, use e g Westermo cable 3146-1100 M12-M12 – 1 m 3146-1101 M12-M12 – 5 m 3146-1103 RJ45-M12 – 1 m 3146-1104 RJ45-M12 – 5 m
Shielded cable	Not required, but recommended in severe electromagnetic environments
Conductive housing	Yes
FRNT reconfiguration time	Typically below 20 ms
Number of ports	12

* X1-X3, X5-X7, X9-X11 on Viper-x12-T3G-P8

X1-X3, X5-X7, X9-X10, PoE ports (additional data)	
Electrical specification	IEEE std 802.3af, 2003 edition, IEEE std 802.3at, 2009 edition
Transmission range	Up to 100 m with CAT5e cable or better
Output voltage	54 VDC, ±5%
Output power*	Max 30.8 W on one port Max 61.6 W in total on all ports

* **Note!** As delivered by Power Sourcing Equipment, i e the Viper-12-PoE switch.
Power available at Powered Device is depending on cable resistance.
Note that PoE ports will not deliver any power for a certain time when a 10 ms interruption occurs on the power input. A suggested workaround is to connect a UPS to the secondary power input.

X4, X8, X12 Gigabit Ethernet ports	
Data rate	10 Mbit/s, 100 Mbit/s, 1000 Mbit/s, manual or auto*
Connection	8-pin M12 X-code
Transmission range	Up to 100 m with CAT5e cable or better
FRNT reconfiguration time	Typically below 400 ms

* **Note!** Full wirespeed (1000 Mbit/s) is not possible between port X4 and the other Gigabit ports due to hardware limitations.

USB, USB port	
Electrical specification	USB 2.0 host interface
Data rate	Up to 480 Mbit/s (high-speed mode)
Maximum supply current	500 mA
Circuit type	SELV
Isolation to	Ethernet ports, 1500 VAC rms DC, 1500 VAC rms No isolation to CON
Connection	5-pin M12 female A-code, use Westermo USB plug 3641-0190

CON, Console port	
Electrical specification	RS-232
Data rate	115.2 kbit/s
Data format	8 data bits, no parity, 1 stop bit, no flow control
Circuit type	SELV
Isolation to	Ethernet ports, 1500 VAC rms DC, 1500 VAC rms No isolation to USB
Connection	5-pin M12 female B-code, use Westermo cable 1211-2215

Location of Interface Ports and LEDs
Viper-112-P8 and Viper-212-P8

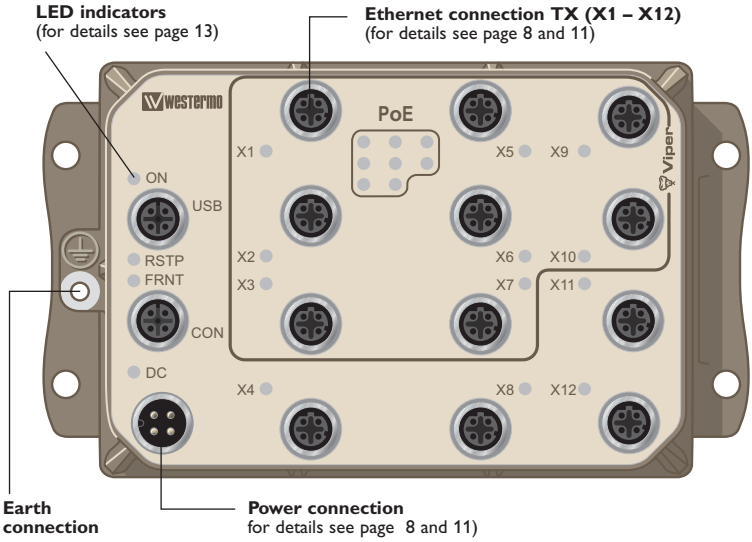

Location of Interface Ports and LEDs
Viper-112-T3G-P8 and Viper-212-T3G-P8

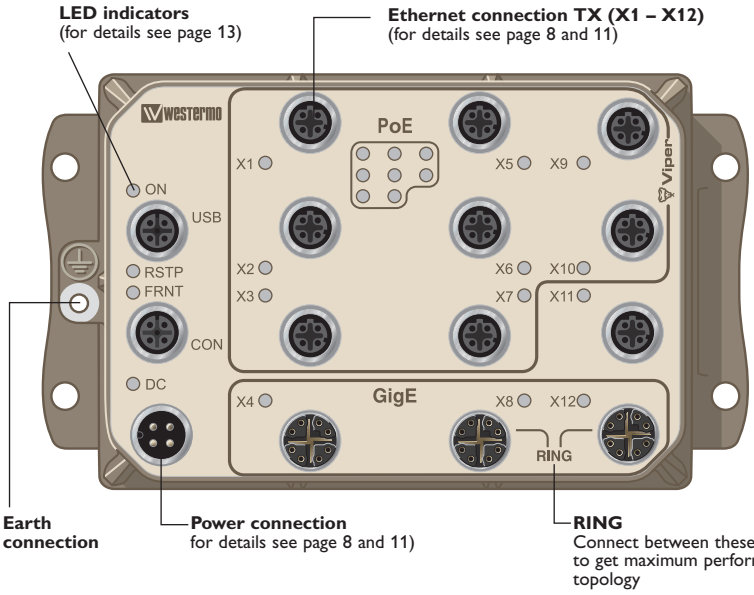

Viper-112-P8 / Viper-212-P8
Viper-112-T3G-P8 / Viper-212-T3G-P8

Ethernet connection
(X1-X12 on Viper-x12-P8, X1-X3, X5-X7, X9-X11 on Viper-x12-T3G-P8)

Pin number	Signal
No 1	TD+
No 2	RX+
No 3	TX–
No 4	RD–
Housing	Shield

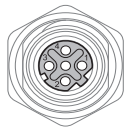

Power connection

Pin number	Signal
No 1	+DC1
No 2	+DC2
No 3	-COM
No 4	-COM

Viper-12-PoE supports redundant power connection. The positive inputs are +DC1 and +DC2, the negative input for both supplies are –COM.

USB

Pin number	Signal
No 1	DN
No 2	VBUS
No 3	NC
No 4	DP
No 5	GND

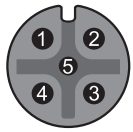

CON

Pin number	Signal
No 1	NC
No 2	TX
No 3	RX
No 4	NC
No 5	GND

Viper-112-T3G-P8 / Viper-212-T3G-P8

X4, X8, X12

Pin number	Signal
1	DA+
2	DA–
3	DB+
4	DB–
5	DD+
6	DD–
7	DC–
8	DC+

Connection to console port

The console port can be used to connect to the CLI (Command Line Interface).

The following steps needs to be taken

1. Connect the serial diagnostic cable (use Westermo cable 1211-2215 to the console port).
2. Connect cable to your computer serial port.
3. Use a terminal emulator and connect with correct speed and format (115200, 8N1) to the assigned port.

For more information about the CLI, see the WeOS management guide.

Connection to USB port

The USB port can be used to copy configuration and log files to/from the switch.

The following steps needs to be taken

1. Connect the USB plug (use Westermo USB plug 3641-0190) to the USB port.
2. Access the switch CLI (via console cable or SSH)
3. Use the CLI "copy" command to copy files between the USB plug and the switch.

For more information about the CLI, see the WeOS management guide.

LED Indicators

LED	Status	Description
ON	OFF	Unit has no power.
	GREEN	All OK, no alarm condition.
	RED	Alarm condition, or until unit has started up. (Alarm conditions are configurable, see "WeOS Management Guide").
	BLINK	Location indicator ("Here I am!"). Activated when connected to IPConfig Tool, or when configuring the unit via Web or CLI.
DC	OFF	Unit has no power.
	GREEN	Power OK on DC1 and DC1.
	RED	Power failure on DC1 or DC2.
FRNT	OFF	FRNT disabled.
	GREEN	FRNT OK.
	RED	FRNT Error.
	BLINK	Unit configured as FRNT Focal Point.
RSTP	OFF	RSTP disabled.
	GREEN	RSTP enabled.
	BLINK	Unit elected as RSTP/STP root switch.
X1 to X12	OFF	No Link.
	GREEN	Link established.
	GREEN FLASH	Data traffic indication.
	YELLOW	Port alarm and no link. Or if FRNT, RSTP or Link Aggregation mode, port is blocked.
PoE	OFF	Port does not consume PoE power
	GREEN	Port consumes PoE Power

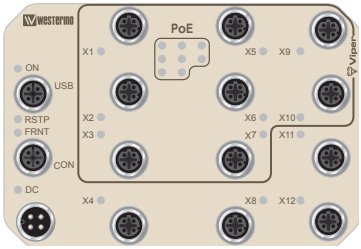

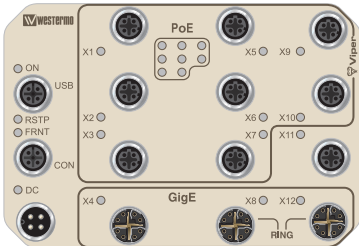

Wall Mounting

There are four 6 mm bore holes intended for mounting the unit. The unit can be mounted vertical or horizontal. Use four M5 screws with 12 mm washer on a flat and stable surface.

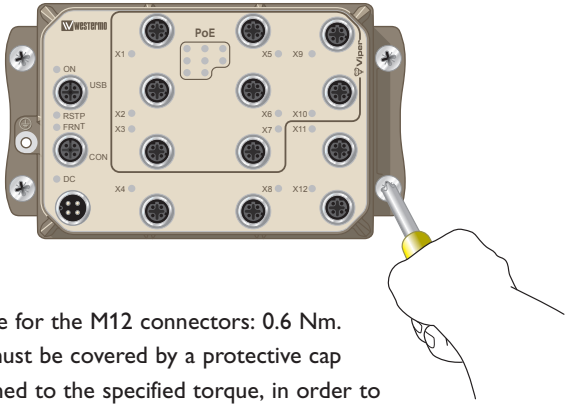

Connection of cables

Recommended tightening torque for the M12 connectors: 0.6 Nm.
Note that unused connectors must be covered by a protective cap (delivered with the unit), tightened to the specified torque, in order to fulfill the specified ingress protection code.

Removal

Disconnect all cables and unscrew the unit from the wall.
Time For Replacement < 15 minutes

Cooling

This unit uses convection cooling. Avoid obstructing the airflow around the unit. Spacing is recommended for the use of unit in full operating temperature range and service life.

CEN/TS 45545-2 mounting notes

Two Viper units can be mounted together and as a single interior non-listed group in the sense of CEN/TS 45545-2 definitions. For multiple units the spacing requirements for interior non-listed groups must be met.

Removal of Protective Caps

Protective caps shall only be removed using a Torx T40 bit or a flat-blade screwdriver (1.2 × 8 mm). Carefully insert the tool into the slot of the protective cap and turn it counter-clockwise until the cap can be removed.

NOTE

Do not use any other tools, as they may damage the protective cap or the connector.

Getting Started

This product runs Westermo Operating System (WeOS) which provides several management tools that can be used for configuration of the unit.

- **IPConfig tool**
  This is a custom Westermo tool used for discovery of attached Westermo units.
  Note! Version of IP Config tool must be 10.4.0 or higher.
- **Web**
  Configuration of the unit using the web browser.
- **CLI**
  Configuration of the unit via the Command Line Interface.

If the computer is located in the same subnet as the switch you can easily use a web browser to configure the unit. Within the web you can configure most of the available functions.

For advanced network settings and more diagnostic information, please use the CLI. Detailed documentation is available in the chapter "The Command Line Management Tool" in the WeOS management guide.

Factory default	*IP address:*	192.168.2.200
	Netmask:	255.255.255.0
	Gateway:	Disabled

Note! If you are not sure about the subnet – consult your network administrator.

Configuration

Configure the unit via web browser

The unit can easily be configured via a web browser.

Open the link http://192.168.2.200 in your web browser, and you will be prompted with a Login screen, where the default settings for Username and Password are:

Username: admin

Password: westermo

Once you have logged in, you can use the extensive integrated help function describing all configuration options. Two common task when configuring a new switch is to assign appropriate IP settings, and to change the password of the admin account. The password can be up to 64 characters long, and should consist of printable ASCII characters (ASCII 33-126); 'Space' is not a valid password character.

Referring Documents

Type	Description	Document number
Management Guide	Westermo OS management guide	6101-3201

Factory reset

It is possible to set the unit to factory default settings by using two standard Ethernet M12 cables.

1. Power off the switch and disconnect all Ethernet cables.
2. Connect one Ethernet cable between Ethernet ports X1 and X6, and the other between Ethernet ports X2 and X5. The ports need to be connected directly by an Ethernet cable, i.e., not via a hub or switch. Use a straight cable – not a cross-over cable – when connecting the ports.
3. Power on the unit.
4. Wait for the unit to start up. Control that the ON LED is flashing red. The ON LED flashing indicates that the unit is now ready to be reset to factory default.

You now have the choice to go ahead with the factory reset, or to skip factory reset and boot as normal.

- Go ahead with factory reset:
  Acknowledge that you wish to conduct the factory reset by unplugging the Ethernet cables. The ON LED will stop flashing. This initiates the factory reset process*, the unit will restart with factory default settings. When the switch has booted up, the ON LED will show a green light, and is now ready to use.
- Skip the factory reset:
  To skip the factory reset process, just wait for approximately 30 seconds (after the ON LED starts flashing RED) without unplugging the Ethernet cables. The switch will conduct a normal boot with the existing settings.

* **Note** Do not power off the unit while the factory reset process is in progress.

Dimensions

Measurements are stated in millimeters.

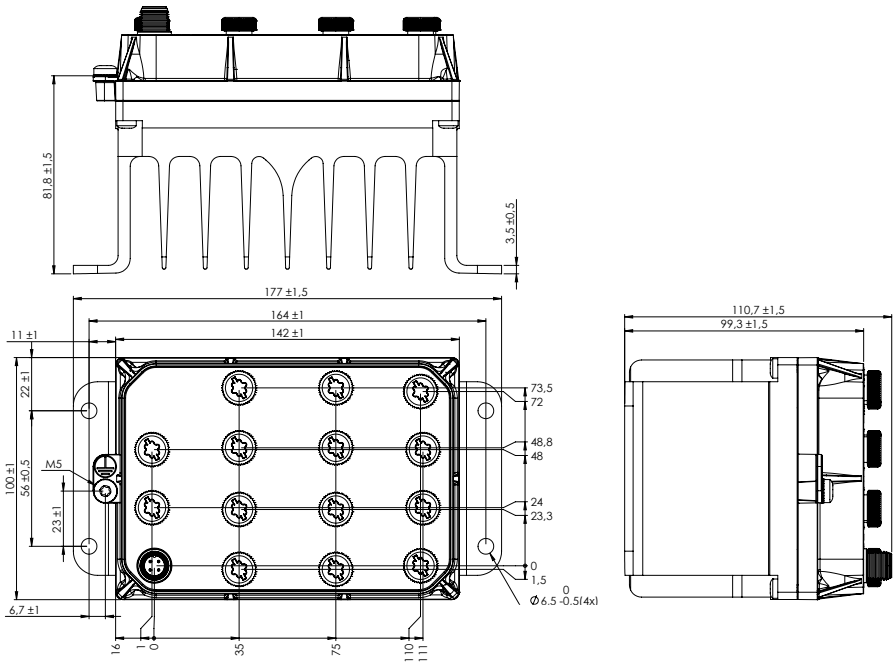

Westermo • Metallverksgatan 6, SE-721 30 Västerås, Sweden
Tel +46 16 42 80 00 Fax +46 16 42 80 01
E-mail: info@westermo.com
www.westermo.com

REV. G 6641-2252 2026-10 Westermo Network Technologies AB, Sweden