User Guide
6650-2270

LRW-112
SERIES

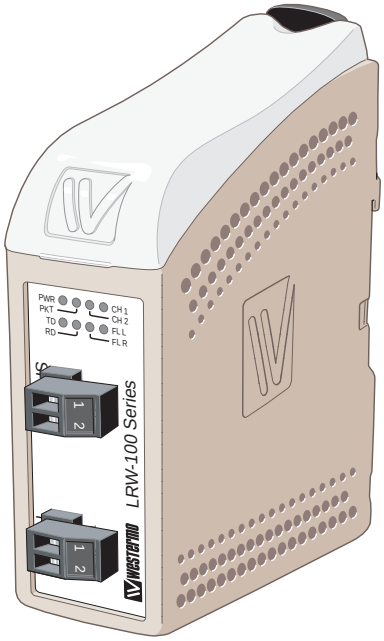

Fibre Optic industrial router for LonWorks® TP/FT-10 point-to-point, line and redundant ring

www.westermo.com

©Westermo Teleindustri AB

Legal information

The contents of this document are provided "as is". Except as required by applicable law, no warranties of any kind, either express or implied, including, but not limited to, the implied warranties of merchantability and fitness for a particular purpose, are made in relation to the accuracy and reliability or contents of this document. Westermo reserves the right to revise this document or withdraw it at any time without prior notice.

Under no circumstances shall Westermo be responsible for any loss of data or income or any special, incidental, and consequential or indirect damages howsoever caused.

More information about Westermo can be found at the following Internet address:

http://www.westermo.com

Safety

Before installation:

Read this manual completely and gather all information on the unit. Make sure that you understand it fully. Check that your application does not exceed the safe operating specifications for this unit.

This unit should only be installed by qualified personnel.

This unit should be built-in to an apparatus cabinet, or similar, where access is restricted to service personnel only.

The power supply wiring must be sufficiently fused, and if necessary it must be possible to disconnect manually from the power supply. Ensure compliance to national installation regulations.

This unit uses convection cooling. To avoid obstructing the airflow around the unit, follow the spacing recommendations (see Cooling section).

Before mounting, using or removing this unit:

Prevent access to hazardous voltage by disconnecting the unit from power supply. Warning! Do not open connected unit. Hazardous voltage may occur within this unit when connected to power supply.

Class 1 Laser Product

Do not look directly into fibre optical fibre port or any connected fibre although this unit is designed to meet the Class 1 Laser regulations.

Care recommendations

Follow the care recommendations below to maintain full operation of unit and to fulfil the warranty obligations.
This unit must not be operating with removed covers or lids.

Do not attempt to disassemble the unit. There are no user serviceable parts inside.

Do not drop, knock or shake the unit, rough handling above the specification may cause damage to internal circuit boards.

Do not use harsh chemicals, cleaning solvents or strong detergents to clean the unit.

Do not paint the unit. Paint can clog the unit and prevent proper operation.

Do not expose the unit to any kind of liquids (rain, beverages, etc). The unit is not waterproof. Keep the unit within the specified humidity levels.

Do not use or store the unit in dusty, dirty areas, connectors as well as other mechanical part may be damaged.

If the unit is not working properly, contact the place of purchase, nearest Westermo distributor office or Westermo Tech support.

Fibre connectors are supplied with plugs to avoid contamination inside the optical port.

As long as no optical fibre is mounted on the connector, e.g. for storage, service or transportation, should the plug be applied.

Note. Fibre Optic Handling

Fibre optic equipment needs special treatment. It is very sensitive to dust and dirt. If the fibre will be disconnected from the modem the protective hood on the transmitter/ receiver must be connected. The protective hood must be kept on during transportation. The fibre optic cable must also be handle the same way.

If this recommendation not will be followed it can jeopardise the warranty.

Cleaning of the optical connectors

In the event of contamination, the optical connectors should be cleaned by the use of forced nitrogen and some kind of cleaning stick.

Recommended cleaning fluids:

- Methyl-, ethyl-, isopropyl- or isobutyl-alcohol
- Hexane
- Naphtha

Maintenance

No maintenance is required, as long as the unit is used as intended within the specified conditions.

Agency approvals and standards compliance

Type	Approval / Compliance
EMC	EN 61000-6-1, Immunity residential environments
	EN 61000-6-2, Immunity industrial environments
	EN 61000-6-3, Emission residential environments
	EN 61000-6-4, Emission industrial environments
	EN 55022, Emission IT equipment, class A
	EN 55024, Immunity IT equipment
	FCC part 15 Class A
Safety	EN 60950-1, IT equipment

FCC Part 15.105 Notice: This equipment has been tested and found to comply with the limits for a Class A digital device, pursuant to Part 15 of the FCC Rules. These limits are designed to provide reasonable protection against harmful interference when the equipment is operated in a commercial environment.
This equipment generates, uses, and can radiate radio frequency energy and, if not installed and used in accordance with the instruction manual, may cause harmful interference to radio communications. Operation of this equipment in a residential area is likely to cause harmful interference in which case the user will be required to correct the interference at his own expense.

EN 55022 Notice: This is a class A product. In a domestic environment this product may cause radio interference in which case the user may be required to take adequate measures.

Westermo Teleindustri AB

Declaration of conformity

The manufacturer Westermo Teleindustri AB
SE-640 40 Stora Sundby, Sweden

Herewith declares that the product(s)

Type of product	Model	Art no
Industrial Converter/Router	LRW-100 Series	3650-1xxx

is in conformity with the following EC directive(s).

No	Short name
2004/108/EC	Electromagnetic Compatibility (EMC)

References of standards applied for this EC declaration of conformity.

No	Title	Issue
EN 55022	Information technology equipment - Emission	2006 +A1:2007
EN 55024	Information technology equipment - Immunity	1998 +A1:2001 +A2:2003
EN 61000-6-1	Electromagnetic compatibility – Immunity for residential environments	2007
EN 61000-6-2	Electromagnetic compatibility – Immunity for industrial environments	2005
EN 61000-6-3	Electromagnetic compatibility – Emission for residential environments	2007
EN 61000-6-4	Electromagnetic compatibility – Emission for industrial environments	2007

The last two digits of the year in which the CE marking was affixed: 09

Signature

Pierre Öberg
Technical Manager
26th October 2009

Postadress/Postal address	Tel.	Telefax	Postgiro	Bankgiro	Org.nr/ Corp. identity number	Registered office
S-640 40 Stora Sundby Sweden	016-428000 Int+46 16428000	016-428001 Int+46 16428001	52 72 79-4	5671-5550	556361-2604	Eskilstuna

Type tests and environmental conditions

Electromagnetic Compatibility			
Phenomena	Test	Description	Level
ESD	EN 61000-4-2	Enclosure contact	± 4 kV
		Enclosure air	± 8 kV
RF field AM modulated	IEC 61000-4-3	Enclosure	10 V/m 80% AM (1 kHz), 80 – 1 000 MHz
Fast transient	EN 61000-4-4	Signal ports	± 1 kV
		Power ports	± 2 kV
Surge		Signal ports balanced	± 1 kV line to earth, ± 1 kV line to line
		Power ports	± 0.5 kV line to earth, ± 0.5 kV line to line
RF conducted	EN 61000-4-6	Signal ports	10 V 80% AM (1 kHz), 0.15 – 80 MHz
		Power ports	10 V 80% AM (1 kHz), 0.15 – 80 MHz
Power frequency magnetic field	EN 61000-4-8	Enclosure	100 A/m, 50 Hz, 16.7 Hz & 0 Hz
Pulse Magnetic field	EN 61000-4-9	Enclosure	300 A/m, 6.4 / 16 µs pulse
Voltage dips and interruption	EN 61000-4-11	AC power ports	10 & 5 000 ms, interruption 10 & 500 ms, 30% reduction 100 & 1 000 ms, 60% reduction
Mains freq. 50 Hz	EN 61000-4-16	Signal ports	100 V 50 Hz line to earth
Mains freq. 50 Hz	SS 436 15 03	Signal ports	250 V 50 Hz line to line
Voltage dips and interruption	EN 61000-4-29	DC power ports	10 & 100 ms, interruption 10 ms, 30% reduction 10 ms, 60% reduction +20% above & –20% below rated voltage
Radiated emission	EN 55022	Enclosure	Class B
	FCC part 15		Class A
Conducted emission	EN 55022	AC power ports	Class B
	FCC part 15	AC power ports	Class B
	EN 55022	DC power ports	Class A
Dielectric strength	EN 60950	Signal port to all other isolated ports	1.5 kVrms 50 Hz 1min
		Power port to other isolated ports	2 kVrms 50 Hz 1min
Environmental			
Temperature		Operating	–40 to +70°C LRW-112PP –40 to +60°C LRW-112
		Storage & Transport	–40 to +70°C
Humidity		Operating	5 to 95% relative humidity
		Storage & Transport	5 to 95% relative humidity
Altitude		Operating	2 000 m / 70 kPa
Service life		Operating	10 years
Vibration	IEC 60068-2-6	Operating	7.5 mm, 5 – 8 Hz 2 g, 8 – 500 Hz
Shock	IEC 60068-2-27	Operating	15 g, 11 ms
Packaging			
Enclosure	UL 94	PC / ABS	Flammability class V-1
Dimension W x H x D			35 x 121 x 119 mm
Weight			0.26 kg
Degree of protection	IEC 529	Enclosure	IP 21
Cooling			Convection
Mounting			Horizontal on 35 mm DIN-rail

Description

The LRW-112 (LRW-112PP) router offers an easy way to extend the distance between LonWorks® 78 kbit/s TP/FT network segments using a fibre optic link.

LRW-112 (LRW-112PP) is based on Echelon´s RTR-10 standard router core module, this allowing standard configuration and installation with standard LON® tools. LRW-112 (LRW-112PP) can be installed as repeaters, configured routers, or learning routers.

The network segment using a high speed 1250 kbit/s backbone fibre optic network link.

This LRW-112 is a fibre optic modem used for point-to-point, (LRW-112PP), multi-drop and redundant ring applications.

The LRW-112 (LRW-112PP) is designed for harsh out-door usage, in industrial, road or railway installations. The complete transparent conversion to and from the fibre optic media facilitates the installation procedure by eliminating the need for any additional network addressing or software configuration.

Convert LON TP/FT-10 interface – optical fibre

- Multidrop, point-to-point alternatively redundant ring communication via fibre optical network
- Small Form Factor Pluggable (SFP) transceivers
- LC fibre connectors, single or multimode
- LC-2 Multimode LC connectors, 5 km (3.1 miles)
- LC-15 Singlemode LC connectors, 15 km (9.3 miles)
- Bi-di, Multimode LC connectors, 5 km (3.1 miles)
- Bi-di, Singlemode LC connectors, 20 km (12.4 miles)
- Redundant power supply, 2 kVAC galvanic isolated to other ports
- Designed for harsh environments
- Re-timing
- Status port

LonWorks® interface

- 2-positions detachable screw terminal
- Data rate 78 kbit/s

Functional description

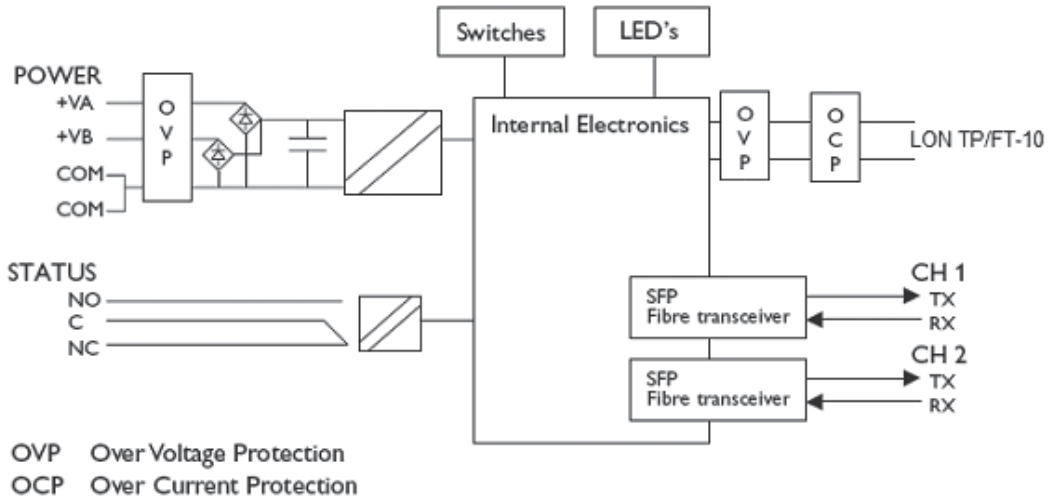

Router TP/FT interface – optical fibre

The LRW-112 (LRW-112PP) is a fibre optic router that converts between LonWorks® TP/FT, and fibre optical link.

Router – optical fibre links

The LRW-112 routes LON packets between a TP/FT-10 channel and a fibre optic channel. The communication channels consist of a fibre optic interface and a TP/FT-10 interface. The fibre optic interface is equipped with either one (PP-version) or two sets of fibre optic ports, each with its separate transmitter and receiver, and the TP/FT-10 channel consists of one LonWorks® FTT-10A transceiver.

Single or multimode LC fibre connectors

The LRW-112 (LRW-112PP) uses Small Form Factor Pluggable (SFP) transceivers that are in compliance with Multi-Sourcing Agreement (MSA). A wide range of different fibre transceivers and connectors can be used.

Point-to-point communication (LRW-112PP) via fibre optic network

With only two network segments, the most cost effective solution is to use two point-to-point LRW-112PP units to create a single fibre optic connection.

The point-to-point connection provides a totally transparent fibre link which means that all data received on one units TP/FT port will be forwarded unchanged to the other port, as illustrated in the figure.

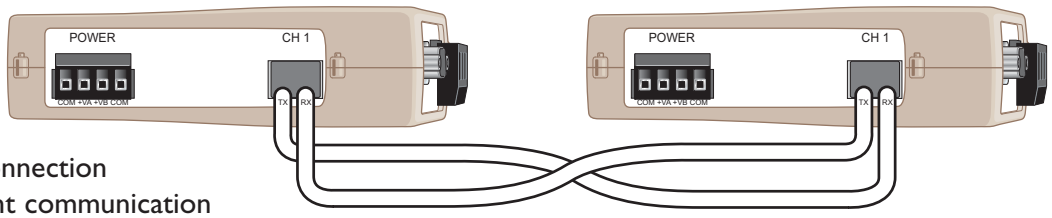

Fibre optical connection
at point-to-point communication

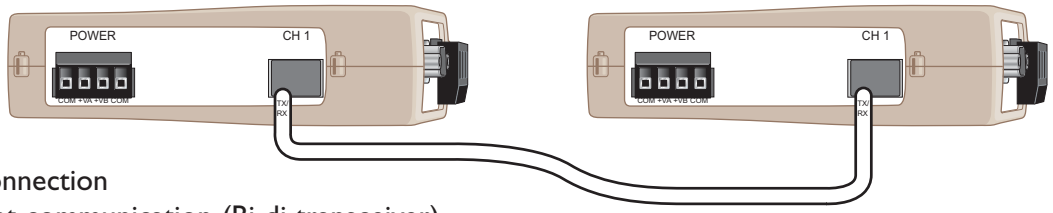

Fibre optical connection
at point-to-point communication (Bi-di transceiver)

Note: Bi-di fibre can be used.
The bi-di transceivers must always be used in pair, see example:

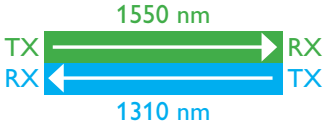

Bi-di transceiver, TX 1550 nm, RX 1310 nm

Bi-di transceiver, TX 1310 nm, RX 1550 nm

Redundant ring communications via fibre optic network

Under normal operation the LonWorks® data is sent over ring A. Should a fault be detected on the fibre ring then the LonWorks® data will be carried on rings A and B.

The LRW-112 units could be linked together to form a fibre optic ring. With ring topology, a built-in redundancy scheme offers communication fault tolerance.

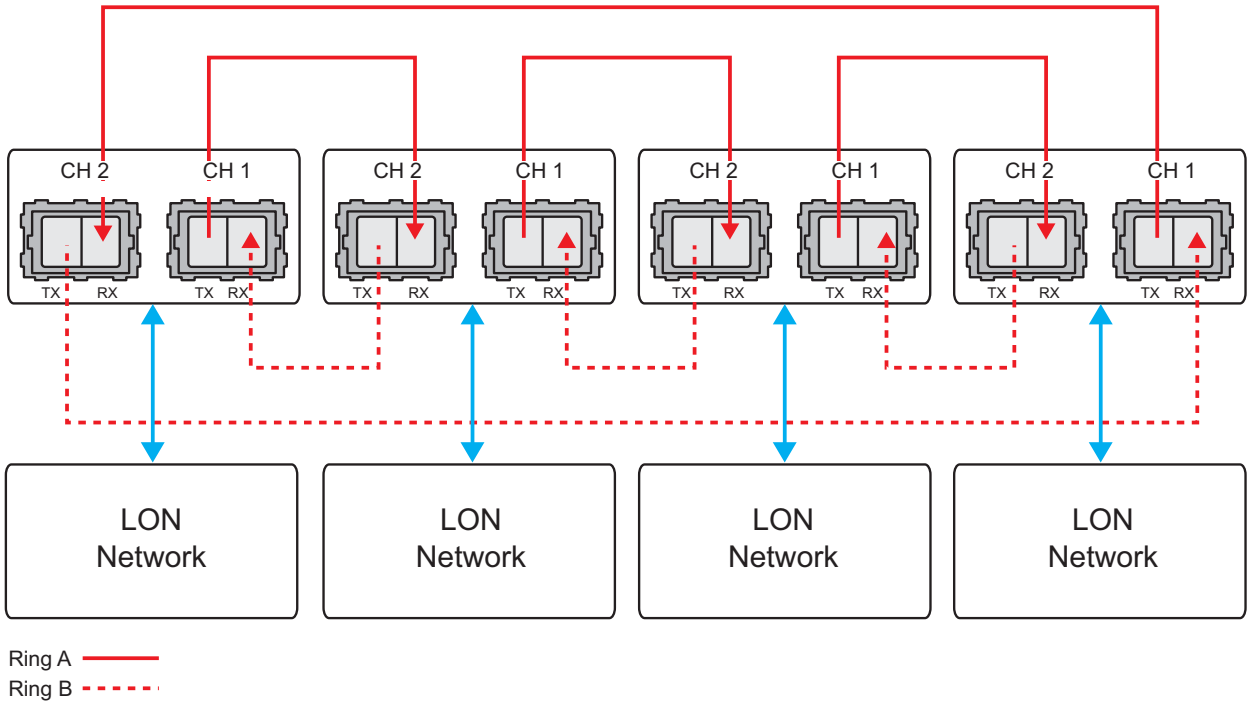

Normal operation

When LRW-112 unit receives data from the LON network, the LRW-112 (the initiator) will transmit the data onto the fibre ring. During normal operation the data will be transmitted onto ring A. Data received by the other LRW-112 units in the ring is transmitted over to the corresponding LON network as well as forwarded in the fibre ring. When a LRW-112 initiator receives its own data packet, the packet it stopped. A LRW-112 initiator will not forward another packet while waiting for its own packet to return.

Behaviour under faulty condition

Elapsed time from any kind of failure at the fibre optic network until data exchange after a corrective action depends on total length of fibre ring. This is typically 40–500 ms. During that time, the transferred data frames should be seen as corrupted or missed.

Failure	Indications
Fibre interruption ring A, TX	On: FL R
Fibre interruption ring A, RX	On: FL L
Fibre interruption ring A, RX & TX	On FL L
Fibre interruption ring B, TX	On: FL R
Fibre interruption ring B, RX	On: FL L
Fibre interruption ring B, RX & TX	On: FL L
Fibre interruption ring A and B (e.g. CH1 or CH2 both TX & RX)	On: FL L &/ or FL R

* Regarding functionality see chapter "multi drop application"

Recovery from faulty status

LRW-112 will automatically recover to the previous operating status when a failure disappears. This involves recovery from bus/multi drop network to Redundant ring A/B when ring is up and running and recovery from Ring B to Redundant ring A when the ring is up and running. The time to recover from the failure status depends on total length of fibre ring. This is typically 40–500 ms. During that time the transferred data frames should be seen as corrupted or missed.

Bus or multidrop communications via fibre optic network

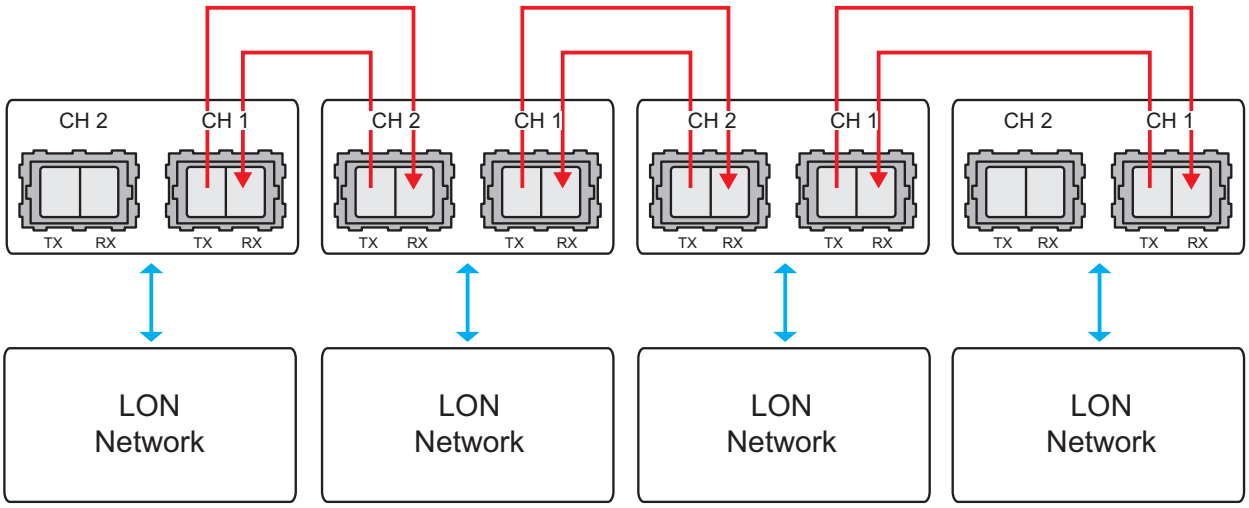

The data is transferred via the fibre optic network to the serial ports of all units. If LRW-112 is connected to two optical fibre links (mid unit) converted data will be transmitted in both directions, via both CH 1 and CH 2. With only one optical fibre link (end unit) converted data will be transmitted in one direction, via CH 1 only. Data received from one LRW-112 optical fibre port will be repeated through the other optical fibre port and it will also convert the frame to serial data.

Optical fibre link functionality and status indication

At power on, all LED's will be active during an initiation sequence followed by an automatic initiation of the optical fibre links. The alarm will be set until the fibre optical links are in operation and ready to transfer serial data.

Data can be transferred over a fibre optical link as long as the link is in operation, indicated by active CH1 respective CH2.

When any of the fibre optical links is out of operation and this is a faulty state, will it be indicated by a local alarm and set the alarm output. It will also send a remote alarm via the other link, if possible. When the link returns to operations mode, the alarm will reset automatically.

Redundant power supply, galvanic isolated (2 kVAC) to other ports.

LRW-112 (LRW-112PP) should be supplied with safety extra low voltage (SELV). It is designed to operate permanently over a wide input range and provided with two independent inputs, allowing redundancy should either supply fail.

Single or multimode LC fibre connectors

The LRW-112 (LRW-112PP) uses Small Form Factor Pluggable (SFP) transceivers that are in compliance with Multi-Sourcing Agreement (MSA). A wide range of different fibre transceivers and connectors can be used.

Note: Bi-Di fibre can be used.

Network installation

The LRW-112 is installed in the network as any standard LON router.

The FO-10 standard channel may be used when creating a channel object.

Note: LRW-112 and LRW-102 cannot be used in the same fibre optic network. It is possible to connect LRW-112 and LRW-102 via the LON interface.

Status interface

This interface enables supervision of fibre optic link state.<8 ohm means that status is OK.

The fault state will be set if:

- Local or remote fibre link errors exist.
- The unit is out of service, e.g. no power supply.

LON Channel delay

On the fibre channel the devices are attached in a daisy-chain fashion. The signal path is through each device, that is the packet passes through each device on its way. The signal is regenerated each time it passes through a device, thus very long distances network could be built.:

The time of propagation depends on the distance and the number of devices to pass through. The propagation delay affects the channel communication parameters. By default the LRW-112 has been programmed with communication parameters suitable for a relative small to medium fibre network that follows the below equation:

Fibre distance (m) / 200 + Number of units < 72

For example the above equation would allow four LRW-112 units to use maximum fibre optic cable length of 13.6 km (8.5 mi).

For larger networks the LRW-112 can be programmed with communication parameters compensating for longer propagation delays. With parameters for large network the following equation can be used.

Fibre distance (m) / 200 + Number of units < 576

For example, the above equation would allow eight LRW-112 units to use maximum fibre optic cable length of 113.6 km (70 mi). Observe however that the maximum allowed fibre length between two LRW-112 units is 20 km (12.4 mi) (using singlemode cable) depending on the performance of the fibre optic transmitter and receiver.

See page 15 for power budget tables.

It is recommended to use a LON® protocoll analyser to verify network perfomance during high peak channel access.

The above discussion considers the limitation in maximum distance due to protocol parameters involving media access and network idle detection. As with all fibre optic products, the maximum distance is also dependent on the over all power budget, see page 15.

Interface specifications

Power	
Rated voltage	12 to 48 VDC 24 VAC
Operating voltage	10 to 60 VDC 20 to 30 VAC
Rated current	400 mA @ 12 VDC 200 mA @ 24 VDC 100 mA @ 48 VDC
Rated frequency	DC AC: 48 to 62 Hz
Inrush current I^2t	0.2 A^2s
Startup current*	1.0 A_{peak}
Polarity	Reverse polarity protected
Redundant power input	Yes
Isolation to	TP/FT-10 port and status port
Galvanic connection to	–
Connection	4-position detachable screw terminal
Connector size	0.2 – 2.5 mm^2 (AWG 24 – 12)
Shielded cable	Not required

* External supply current capability for proper start up.

Status	
Port type	Solid state relay
Operating voltage	Up to 60 VDC
Load current	Up to 100 mA
Contact resistance	8 Ω
Isolation to	TP/FT-10 port and power port
Connection	2-position detachable screw terminal
Connector size	0.2 – 2.5 mm^2 (AWG 24 – 12)

TP/FT-10	
Electrical specification	LonWorks® TP/FT-10 using FTT-10A transceiver
Data rate	78.5 kbit/s
Data format	Synchronous
Protocol	LonTalk®
Transmission range	Up to 2700 m
Termination	Single or double external termination according to TP/FT-10 specification
Isolation to	Power port and status port
Connection	2-positon detachable screw terminal
Connector size	0.2 – 2.5 mm^2 (AWG 24 – 12)
Shielded cable	Not required
Conductive housing	No

Optical Power Budget

The maximum supported link lengths as specified in the table above should only been seen as indicative. The allowed link length is calculated from the Optical Power Budget (OPB), (the available optical power for a fibre-optic link), and the attenuation of the fibre, comprising losses due to in-line connectors, splices, optical switches and a margin for link aging (typical 1.5 dB for 1300 nm).

The worst-case Optical Power Budget (OPB) in dB for a fibre-optic link is determined by the difference between the minimum transmitter output optical power and the lowest receiver sensitivity.

FX (Fibre)	**SM-LC15**	**MM-LC2**
Fibre connector	LC duplex	LC duplex
Fibre type	Singlemode 9/125 mm	Multimode, 62.5/125 and 50/125 mm
Wavelength nm	1310	1310
Transmitter Output optical power min/max	–15/–8 dBm**	–20/–14 dBm*
Receiver Input sensitivity, max	–31 dBm	–31 dBm
Receiver Input optical power, max	–8 dBm	–8 dBm
Optical power budget, worst-case	16 dB	11 dB
Transceiver type	Small Form Factor Pluggable (SFP) Multi-Sourcing Agreement (MSA) compliant	
Laser class	Class 1, IEC 825-1 Accessible Emission Limit (AEL)	

FX (Fibre)	**Bi-di LC-20**	**Bi-di MM LC-2**
Fibre connector	LC Simplex	LC Simplex
Fibre type	Singlemode 9/125 µm	Multimode 62.5/125 and 50/125 µm
Wavelength nm, connector 1 Wavelength nm, connector 2	Tx1310, rx 1550 TX 1550, rx 1310	Tx 1310, rx 1550 Tx 1550, rx 1310
Transmitter Output optical power min/max	-10/0 dBm **	–10/–8 dBm *
Receiver Input sensitivity, max	–28 dBm	–28 dBm
Receiver Input optical power, max	0 dBm	–0 dBm
Optical power budget, worst-case	18 dB	18 dB
Transceiver type	Small Form Factor Pluggable (SFP) Multi-Sourcing Agreement (MSA) compliant	
Laser class	Class 1, IEC 825-1 Accessible Emission Limit (AEL)	

* Output power is power coupled into a 62.5/125 µm multimode fibre

** Output power is power coupled into a 9/125 µm singlemode fibre

*** The optical power should be reduced by at least 5 dB (SM-LC80 and Bi-di LC-60) or 3dB (SM-LC-40 and Bi-di LC-40) between the optical output and input.

Location of Interface ports, LED's and DIP-switches

LRW-112/ LRW-112PP

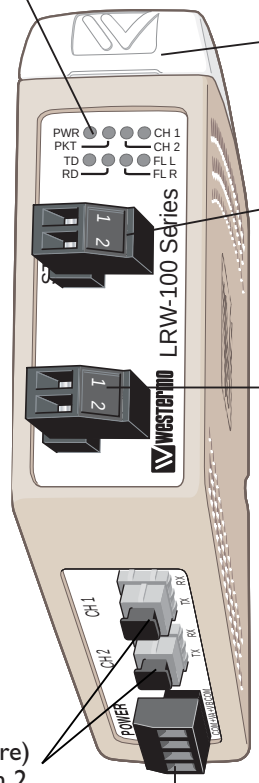

LED Indicators (for details see page 17)

LED Indicators placed under the lid (for details see page 17)

FX (Fibre) Ch 1 and Ch 2. (Ch 2 on LRW-102 only) For fibre details see page 15.

Status

Position	Direction*	Description	Product marking
1	In/Out	Contact with position 2 when fibre optical links are in operation	1
2	In/Out	Common	2

TP/FT-10

Position	Direction*	Description	Product marking
1	In/Out	TP/FT-10 connection	N1
2	In/Out	TP/FT-10 connection	N2

Power

Position	Direction*	Description	Product marking
1	In	Common voltage	COM
2	In	Voltage A	+VA
3	In	Voltage B	+VB
4	In	Common voltage	COM

* Direction relative this unit

LED indicators

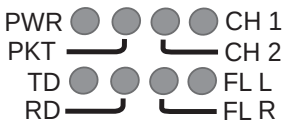

LED	Status	Description
PWR Power	ON	In service (power)
	Flashing	Fault condition
	OFF	Out of service
PKT	Flaching	Packets are passed between the router sides
	OFF	–
CH 2	ON	Fibre link at port CH 2 in operation. Data can be transmitted. (Not used in pp version)
	OFF	Fibre link at port CH 2 out of operation. (Not used in pp version)
CH 1	ON	Fibre link at port CH 1 in operation. Data can be transmitted.
	OFF	Fibre link at port CH 1 out of operation.
TD	Flashing	Receive accepted data on the serial port. Data will be transmitted to the fibre link.
	OFF	–
RD	Flashing	Receive data on the fibre link that is transmitted to the serial port.
	OFF	–
FL R (Red)	ON	Remote fibre link failure. A fibre link is out of operation at any other unit of the optical network.
	OFF	All fibre links are in operation at all other units in the fibre optical network.
FL L (Red)	ON	Local fibre link failure. This unit has identified a fibre link failure.
	OFF	Fibre link of this unit is in operation.
A_SRV Placed under lid	ON	Router side A (TP/FT-10) un-recoverable error
	Flashing	Router side A (TP/FT-10) un-configured
	OFF	Router side A (TP/FT-10) configured
B_SRV Placed under lid	ON	Router side B (Fibre) un-recoverable error
	Flashing	Router side B (Fibre) un-configured
	OFF	Router side B (Fibre) configured

Configuration

All needed configurations and parameter settings are done by the DIP-switches, located under the top lid of the LRW-112 (LRW-112PP).

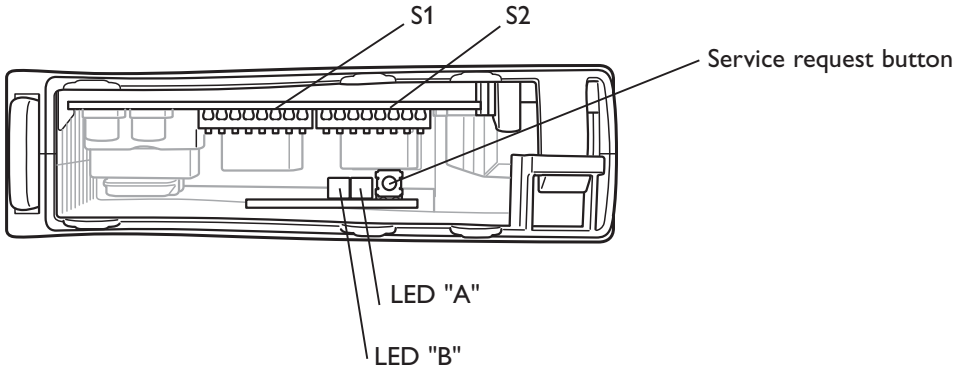

Service request button

Pressing this button generates service request messages from each side of the router. The service button is used for installation in network management tool.

DIP-switch settings

Before DIP-switch settings:

Prevent damage to internal electronics from electrostatic discharges (ESD) by discharging your body to a grounding point (e.g. use of wrist strap)

Note: Disconnect power before DIP-switch settings.

S1 DIP-switch

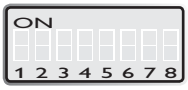

Not used

S2 DIP-switch

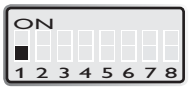

Set status output at local or remote error

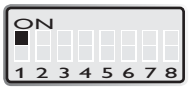

Set status interface at local fibre link error (Not used in pp version)

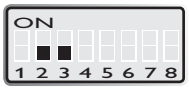

Multidrop end unit (use chanal 1 for end unit, not used in pp version)

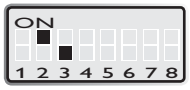

Multidrop unit, mid unit (Not used in pp version)

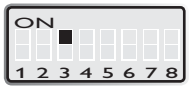

Redundant ring (Not used in pp version)

Factory settings

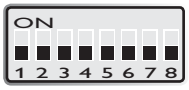

S1

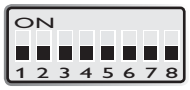

S2

Mounting

This unit should be mounted on 35 mm DIN-rail, which is horizontally mounted inside an apparatus cabinet, or similar.

Snap on mounting, see figure.

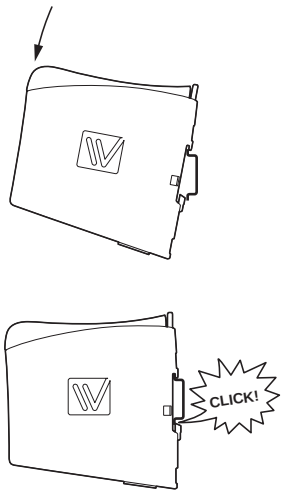

Cooling

This unit uses convection cooling. To avoid obstructing the air-flow around the unit, use the following spacing rules. Minimum spacing 25 mm (1.0 inch) above /below and 10 mm (0.4 inches) left /right the unit. Spacing is recommended for the use of unit in full operating temperature range and service life.

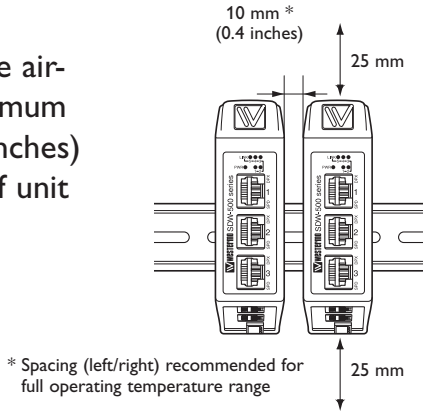

Removal

Press down the black support at the top of the unit. See figure.

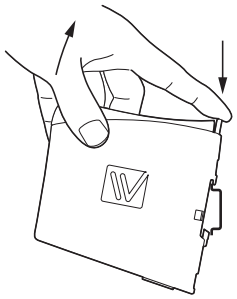

Start up guide

Redundant ring application

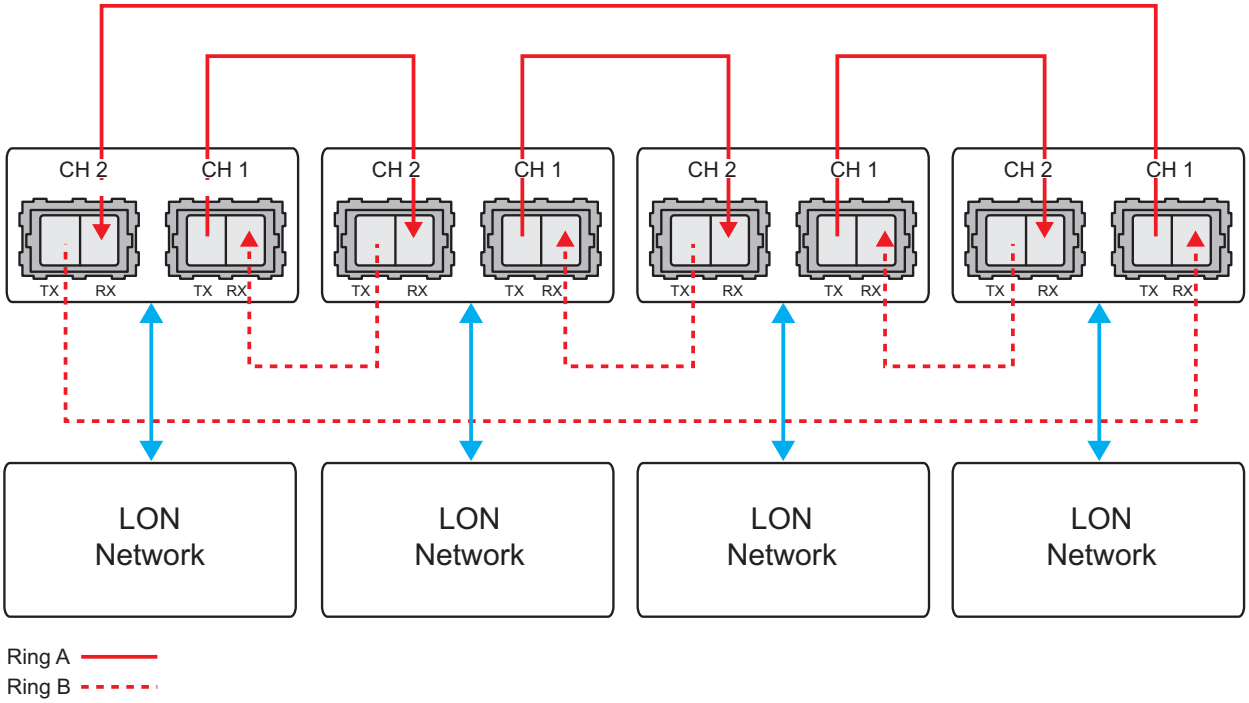

Follow the steps below to get the unit up and running in a simple application:

- Prepare the fibre optical network.
- Redundant ring. Set switch S2:3 to ON and all others to OFF, at all units.
  (If the status interface should be local, set S2:1 to ON)
- Connect the fibre links between the units.
- Connect the power supply to all units.
- The Fibre links should be in operation, indicated by active CH 1 and CH 2 LED's.
- Connect the LON equipment to the LRW-112.
- The Redundant ring application is up and running.

Multidrop application

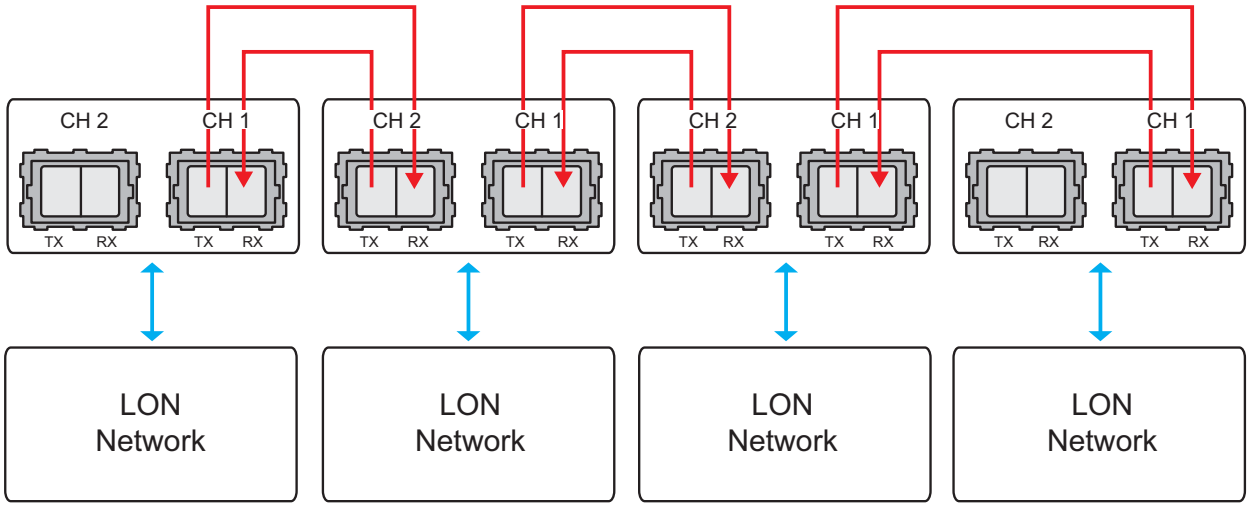

Prepare the fibre optical network:

- Multidrop, mid units (CH 1 & CH 2). Set switch S2:2 to ON.
- Multidrop, end units (CH 1 only). All switches should be set to OFF.
- Connect the fibre links between the units.
- Connect the power supply to all units.
- The Fibre links should be in operation, indicated by active CH 1 and CH 2 LED's.
- Connect the LON equipment to the LRW-112.
- The Multidrop application is up and running.

Note! LRW-112PP can be used as end unit.

Point-to-point application

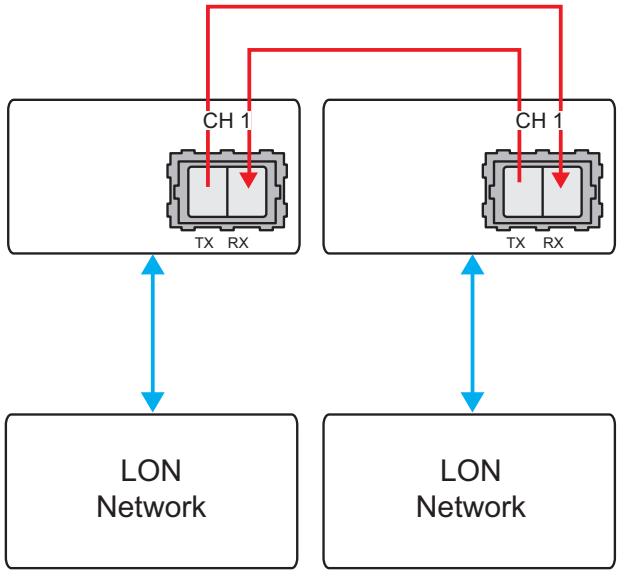

Configure the network

- Check that it is running correctly with the electrical serial network.

Prepare the fibre optical network

- Connect the fibre links between the units.
- Connect the power supply to all units.
- The Fibre links should be in operation, indicated by active CH 1 LED's.
- Connect the LON equipment to the LRW-112PP.
- The point-to-point application is up and running.

Redundant ring with Bi-di transceivers

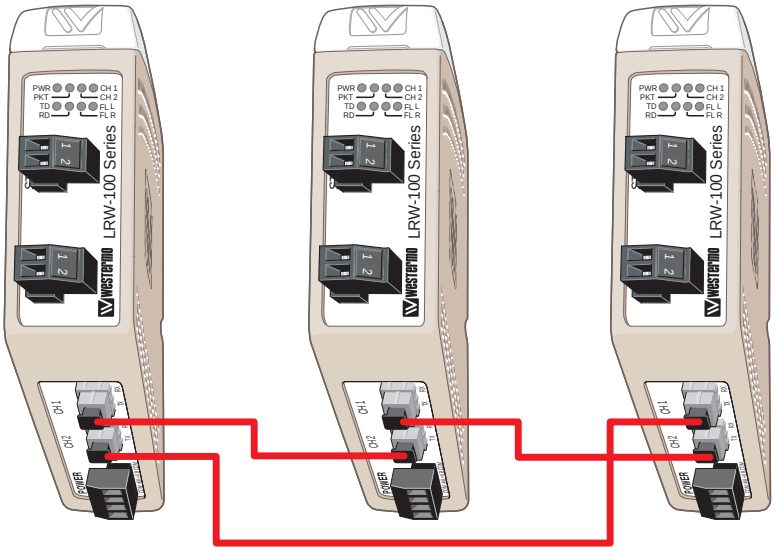

	Unit 1	Unit 2	Unit 3
CH2	Bi-di 1550 nm	Bi-di 1550 nm	Bi-di 1550 nm
CH1	Bi-di 1310 nm	Bi-di 1310 nm	Bi-di 1310 nm

Multidrop with Bi-di transceivers

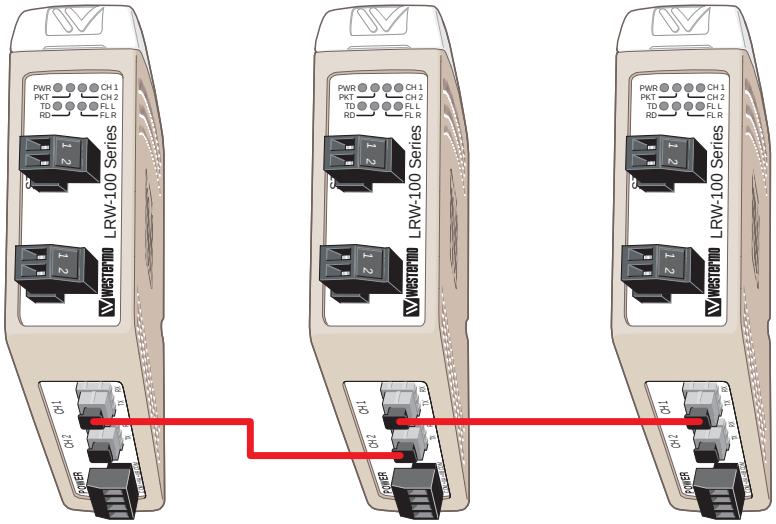

	End unit 1	Unit 2	End unit 3
CH2	–	Bi-di 1550 nm	–
CH1	Bi-di 1310 nm	Bi-di 1310 nm	Bi-di 1550 nm

Point-to-point with Bi-di transceivers

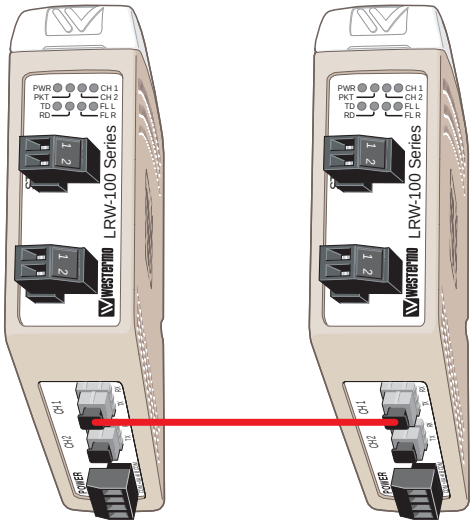

	Unit 1	Unit 2
CH1	Bi-di 1310 nm	Bi-di 1550 nm

Note: With Bi-di fibre it is necessary to have one 1310 nm in one end and 1550 nm in the other end.

- Bi-di 1310 nm will transmit with 1310 nm and resceive with 1550 nm.
- Bi-di 1550 nm will transmitt with 1550 nm and resceive with 1310 nm.

Westermo Teleindustri AB • SE-640 40 Stora Sundby, Sweden
Phone +46 16 42 80 00 Fax +46 16 42 80 01
E-mail: info@westermo.se
Westermo Web site: www.westermo.com

Subsidiaries

Westermo Data Communications AB
Svalgången 1
SE-724 81 Västerås
Phone: +46 (0)21 548 08 00 • Fax: +46 (0)21 35 18 50
info.sverige@westermo.se

Westermo Data Communications Ltd
Talisman Business Centre • Duncan Road
Park Gate, Southampton • SO31 7GA
Phone: +44(0)1489 580-585 • Fax.:+44(0)1489 580586
E-Mail: sales@westermo.co.uk

Westermo Data Communications GmbH
Goethestraße 67, 68753 Waghäusel
Tel.: +49(0)7254-95400-0 • Fax.:+49(0)7254-95400-9
E-Mail: info@westermo.de

Westermo Data Communications S.A.R.L.
9 Chemin de Chilly 91160 CHAMPLAN
Tél : +33 1 69 10 21 00 • Fax : +33 1 69 10 21 01
E-mail : infos@westermo.fr

Westermo Data Communications Pte Ltd
2 Soon Wing Road #08-05
Soon Wing Industrial Building
Singapore 347893
Phone +65 6743 9801 • Fax +65 6745 0670
E-Mail: sales@westermo.com.sg

Westermo Teleindustri AB have distributors in several countries, contact us for further information.

REV.C 6650-2270 2009.10 Westermo Teleindustri AB, Sweden